4 GREAT Storage Projects

st • Under-Bed Storage • Wall-Mounted Utility Shelf • Machine-Cut Dovetails

Woodsmith®

Vol. 21 / No. 125

Look Inside:

- Build a Rolling Under-Bed Storage Box
- Store Tools & Hardware On Our Wall-Mounted Shelf

Seven Drawer
Chest-on-Chest

www.woodsmith.com

Please display until Dec. 8
11>
0 74470 02992 2
U.S. $4.95 Canada/Intl. $5.95

Woodsmith

No. 125 October, 1999

Publisher Donald B. Peschke
Editor Terry J. Strohman
Associate Editors Jon Garbison, Vincent Ancona
Art Director Todd Lambirth
Senior Illustrators David Kreyling, Dirk Ver Steeg, Mike Mittermeier
Editorial Intern Wyatt Myers
Graphic Intern Kara Blessing

CREATIVE RESOURCES

Creative Director: Ted Kralicek • *Project Developer:* Ken Munkel • *Sr. Project Designers:* Kent Welsh, Kevin C. Boyle • *Shop Manager:* Steve Curtis • *Shop Craftsman:* Steve Johnson • *Senior Photographer:* Crayola England • *Photographer:* Roderick Kennedy

SPECIAL PUBLICATIONS

Executive Editor: Douglas L. Hicks • *Art Director:* Steve Lueder • *Senior Graphic Designers:* Chris Glowacki, Cheryl L. Simpson • *Assistant Editors:* Joseph E. Irwin, Craig Ruegsegger • *Graphic Intern:* Vu Nguyen

CIRCULATION

Subscriber Services Director: Sandy Baum • *New Business Director:* Glenda K. Battles • *New Business Mgr.:* Todd Bierle • *Promotion Mgr.:* Rick Junkins • *Renewal Mgr.:* Paige Rogers • *Billing Mgr.:* Rebecca Cunningham • *Circ. Marketing Analyst:* Kris Schlemmer • *Asst. Subs. Mgr.:* Joy Krause • *Creative Mgr.:* Melinda Jo Haffner • *Sr. Graphic Designer:* Mark Hayes

CORPORATE SERVICES

Controller: Robin Hutchinson • *Sr. Account.:* Laura Thomas • *Accts. Payable:* Mary J. Schultz • *Accts. Receivable:* Margo Petrus • *Production Dir.:* George Chmielarz • *Production Assistant:* Susan Rueve • *Electronic Publishing Director:* Douglas M. Lidster • *Network Administrator:* Cris Schwanebeck • *Pre-press Image Specs.:* Troy A. Clark, Minniette Bieghler • *New Media Manager:* Gordon C. Gaippe • *Web Site Art Director:* Gene Pedersen • *E-Commerce Analyst:* Carol Schoeppler • *Web Site Editor:* Holly Kilborn • *Web Site Prod. Specialist:* Adam Best • *H.R. Assistant:* Kirsten Koele • *Admin. Assistant:* Julia Fish, Sherri Ribbey • *Receptionist:* Jeanne Johnson • *Mail Room/Delivery:* Lou Webber • *Special Projects Director:* Saville H. Inman • *Building Maint.:* Ken Griffith

WOODSMITH MAIL ORDER

Operations Dir.: Bob Baker • *Customer Service Mgr.:* Jennie Enos • *Warehouse Supr.:* Nancy Johnson • *Buyer:* Linda Jones • *Tech. Service Rep.:* Matt TeRonde • *Admin. Assist.:* Nancy Downey • *Cust. Serv. Reps.:* Tammy Truckenbrod, Anna Cox, Deborah Rich, April Revell, David Gaumer • *Warehouse:* Sylvia Carey, Dan Spidle, Eric Tullis, Sheryl Knox

WOODSMITH STORE

Manager: Dave Larson • *Assistant Manager:* Paul Schneider • *Sales Staff:* Pat Lowry, Wendell Stone, Jim Barnett, Kathy Smith, Larry Morrison, Harold Cashman • *Office Mgr:* Vicki Edwards

Woodsmith® (ISSN 0164-4114) is published bimonthly (Feb., Apr., June, Aug., Oct., Dec.) by August Home Publishing Company, 2200 Grand, Des Moines, IA 50312.

Woodsmith® is a registered trademark of August Home Publishing. **Copyright**© 1999 August Home Publishing Company. All rights reserved.

Subscriptions: Single copy: $4.95. One year subscription (6 issues), $21.94. (Canada/International add $10 per year, U.S. funds.)
Periodicals Postage Paid at Des Moines, IA and at additional offices. USPS/Heartland Press Automatable Poly.
Postmaster: Send change of address to *Woodsmith*, Box 37112, Boone, IA 50037-2112.
Subscription Questions? Write to *Woodsmith*, P.O. Box 842, Des Moines IA 50304-9961 or call 1-800-333-5075, 8:00 am to 5:00 pm, Central Time, weekdays. Or send an e-mail to: orders@woodsmith.com
E-Mail: woodsmith@woodsmith.com
World Wide Web: http://www.woodsmith.com

Printed in U.S.A.

SAWDUST

The feature project in this issue is a cherry chest-on-chest dresser. (The article begins on page 6.) As the name implies, it looks like two chests, one stacked on top of the other.

While it's similar to several other pieces of cherry bedroom furniture we've built in the past (there's a photo of all the pieces on page 35), this chest-on-chest has quickly become one of my favorite projects. But to be honest, I was having a hard time putting my finger on exactly why I liked it so much.

So I did a little scientific research. (I walked around and asked several other people what they thought of this project.) I kept hearing the same words over and over again: *timeless*, *elegant*, *heirloom*, and *classic*.

A CLASSIC. That got me to thinking about just what is it that makes a project "a classic." I've decided it's not any one thing. Rather, it's a combination of several features that work together to create a special project.

In this case, we started with traditional frame and panel construction and solid wood drawers held together with dovetail joints. Then we refined things a bit. We chamfered the edges of the frames that surround the panels. We beveled the edges of the drawer fronts, to give the drawers the look of raised panels. And to add interest, we applied strips of cove molding.

Altogether these small details add up to an impressive looking project. (Take a look at the photos on the front cover.) At a glance, it might look like an intimidating project to build. But don't let its appearance fool you. It's actually much easier than it looks.

For one thing, you don't have to make one big piece of furniture. This chest-on-chest dresser is designed to be built in two separate units. And the joinery used to build the top and bottom chests is the same — the only difference is the size of the pieces.

Speaking of size, this is a rather tall project. It stands just over five feet when complete. If that's too large (or you don't need that much storage space), you don't have to build the entire project. It's designed so you can build *either* the top or the bottom chest and use them separately.

DOVETAIL JIG. Another way to simplify the construction of this chest-on-chest dresser is to use a dovetail jig when making the drawers.

The dovetail jig we used is the same one we've been using for the last eleven years. (It's the dovetail jig we built back in issue No. 58.) And during that time we've come up with several tips and techniques to get perfect-fitting dovetail joints. So we've included a separate article (beginning on page 24) that will help you get the most out of either the *Woodsmith* dovetail jig or other models of half-blind dovetail jigs.

Terry

A LOOK INSIDE

CONTENTS

Features

Chest-on-Chest 6

Traditional molding, raised panel drawers, and frame and panel construction come together in this chest-on-chest to create an heirloom that will be passed down for generations.

Under-Bed Storage 20

Make use of the space under your bed with this pull-out storage project. It can be a great chance to try your hand at routing half-blind dovetails. Or you can choose to build a quicker version with simple rabbets instead of the dovetails.

Machine-Cut Dovetails 24

Whether you're building one drawer or seven, a common half-blind dovetail jig makes it easy to rout strong, traditional-looking dovetails. Here's what you need to know when setting up your jig and routing the workpieces.

Wall-Mounted Utility Shelf 28

One way to keep your worksurface clutter-free is to make sure you have plenty of storage space — within reach. This easy-to-build shelf is a good solution. It has a convenient "open" design and a handy shop light underneath.

Table Saw Extension Wing 34

One of our readers sent us this clever, space-saving idea. It's a table saw extension wing with a hinged lid that lifts up to reveal a handy storage area for your table saw accessories.

Departments

Tips & Techniques 4

Shop Notes 18

Sources 35

Chest-on-Chest *page 6*

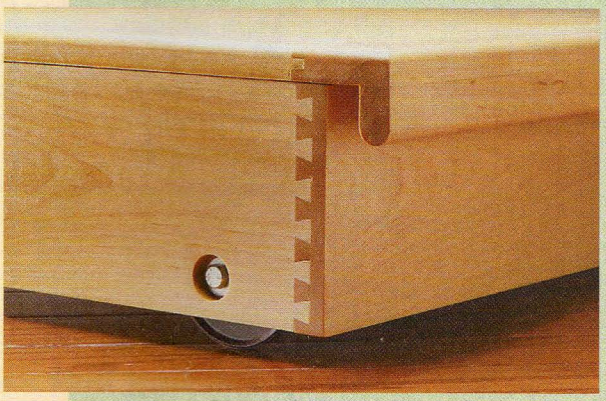

Under-Bed Storage *page 20*

Machine-Cut Dovetails *page 24*

Wall-Mounted Utility Shelf *page 28*

TIPS & TECHNIQUES

Centering a Lathe Faceplate

I do a lot of faceplate turning on my lathe. But before I start turning, I often have trouble trying to center the faceplate on the blank.

Finding the center of the blank is easy — you just mark diagonal lines across the workpiece. The spot where these lines cross is the center, see Fig. 1.

But trying to center the faceplate on this spot can be a challenge. That is, until I realized that all it takes to accurately center a faceplate is a spade bit.

To center the faceplate, find a spade bit that is the same diameter as the opening on your faceplate. Then, place the point of this bit directly on the centerpoint of your blank.

While holding the bit in place, simply slide the faceplate down over the end of the drill bit, see Fig. 2. Now just screw the faceplate to the blank, see Fig. 3.

Edward J. Menicheschi
Hershey, Pennsylvania

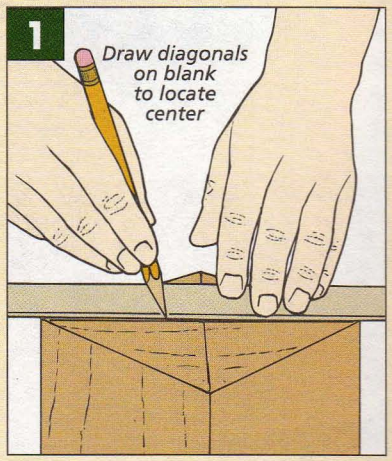

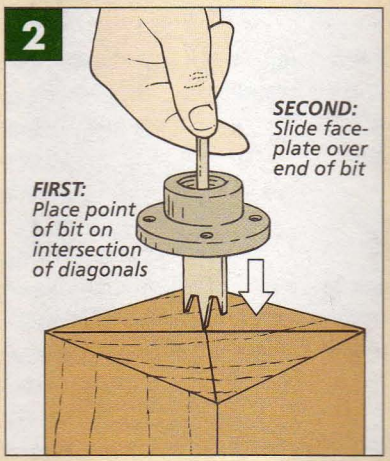

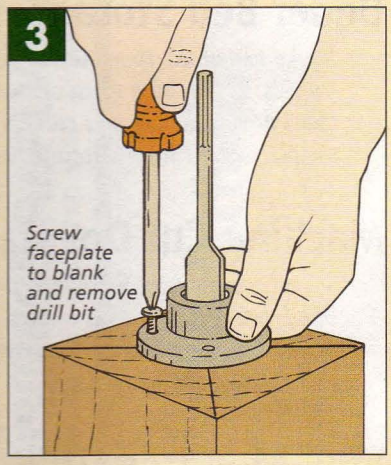

Flip Up Sanding Mat

Whenever I'm sanding small pieces with a palm or belt sander, I like to use a non-skid sanding mat. The problem is that I can never seem to find my sanding mat when I need it.

Rather than constantly hunting around my workshop every time I want to use the mat, I found a way to keep it within easy reach at all times.

I attached the mat to the back edge of my bench with a small cleat and a few woodscrews, see drawing.

Now, I just flip the mat up on the bench when I need it. And when I'm done, it flips back down out of the way, see photos at right.

David Youngren
Clovis, California

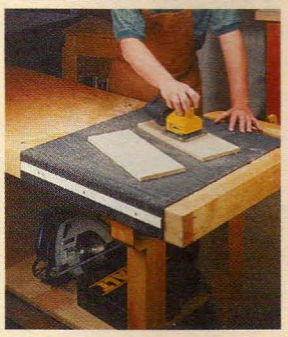

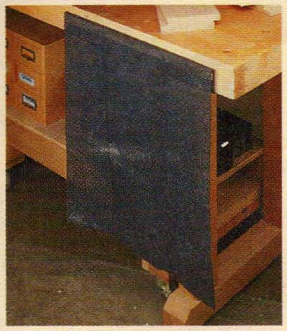

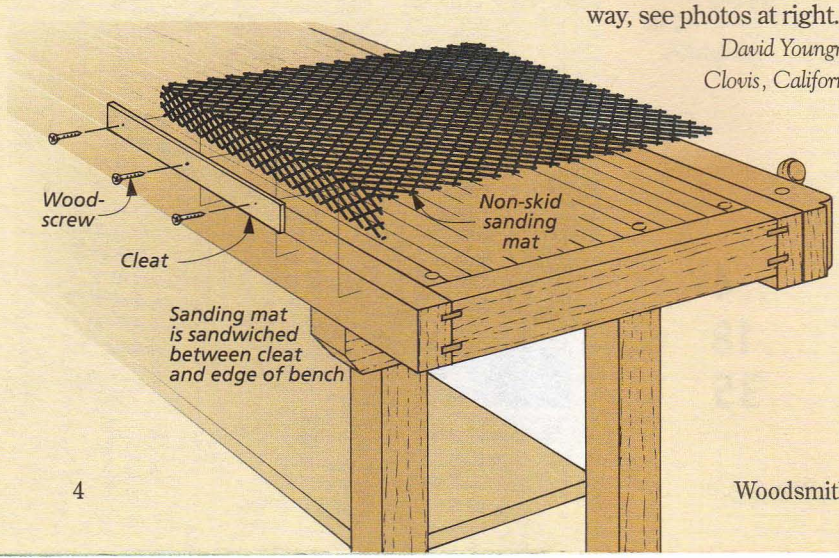

SUBMIT YOUR TIPS

If you would like to share an *original* shop-tested tip, send it to: *Woodsmith,* Tips and Techniques, 2200 Grand Avenue, Des Moines, Iowa 50312. Or if it's easier, FAX it to us at: 515-282-6741. Or use our E-Mail address: woodsmith@woodsmith.com.

Include a brief explanation and sketch or photo. If your tip is published, you'll receive $30 to $150, depending on the published length. And don't worry, we'll rewrite the tip and redraw the art, if necessary. Also, *please* include a daytime phone number so we can contact you if we have any questions regarding your tip.

Radial Arm Saw Cut Indicator

Sometimes, I'll have a project that requires a lot of precise crosscuts on my radial arm saw. But with a radial arm saw, it can be difficult to line up the saw blade with the layout line on the workpiece.

To solve this problem, I placed several strips of masking tape on the tabletop in the path of the blade. When I make the first cut, the blade leaves a neat line in the masking tape.

Now, I can line up the layout line on my board with the edge of the tape and easily cut it to the desired length, see drawing. Note: Make sure your tape coverage is wider than the actual cut so it won't be covered up by your workpiece.

James C. Smith
Washington, Illinois

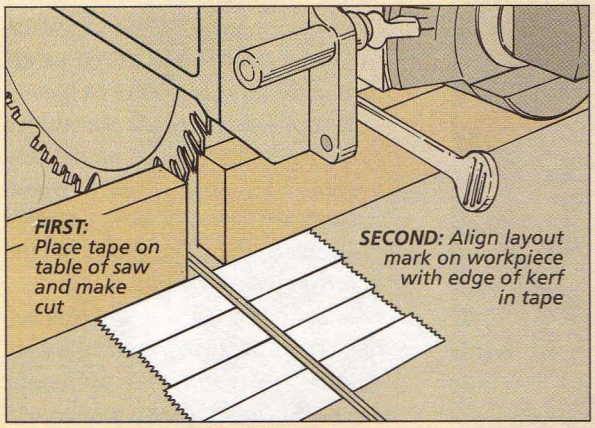

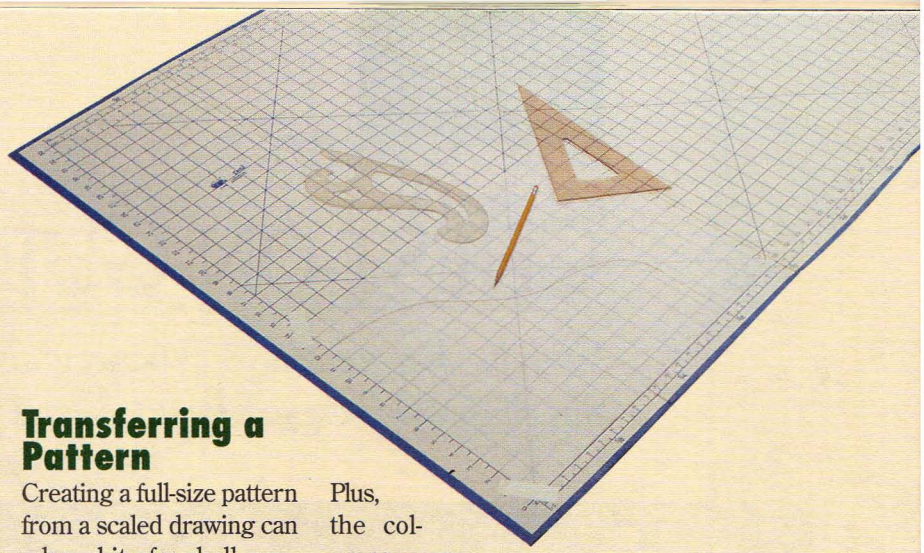

Transferring a Pattern

Creating a full-size pattern from a scaled drawing can a be a bit of a challenge, even if the scaled drawing is on a grid. I've tried enlarging patterns on a copy machine before, but it's difficult to get precise dimensions on a photocopy.

To make things easier, I use a pattern cutting board. These can usually be found at any store that sells sewing supplies.

The pattern cutting board has a nice, bold 1"-square grid printed on it. Plus, the columns are numbered for easy layout.

To transfer a 1"-square grid pattern from a magazine or book, I start by taping a piece of tracing paper down to the board and transfer the coordinates from the drawing to the tracing paper. Then I simply connect the dots and cut out the pattern to use on my workpiece.

Ronnie Sorgi
Eden, North Carolina

Cutting a Lid from a Box

Over the years, I've seen several different ways to cut a lid from a shop-made box. But the method I've used for years seems faster and easier than any other.

First, I set the saw blade about 1/32" below the thickness of the box sides, see Fig. 1a. (I usually just eyeball this measurement by placing a scrap from my box up against the blade.)

Then, adjust the rip fence so the distance between the fence and blade equals the desired height of the lid, see Fig. 1a.

Now, simply rip all four sides of the box, see Fig. 1. But because the blade is set just below the thickness of the box sides, the lid will remain attached to the box by a thin membrane of wood. This membrane is just enough to keep the kerf of the wood from pinching the saw blade.

Once you've ripped all four sides of the box, the lid is ready to be removed. To do this, use a sharp utility knife to cut through the membrane, see Fig. 2. Note: Always cut through the membrane on all four sides. If you crack the membrane, you might accidentally damage the lid.

After you've separated the lid from the box, sand all the edges to completely remove the remaining slivers of the membrane, see Fig. 3.

Bueron B. Taylor
Sacramento, California

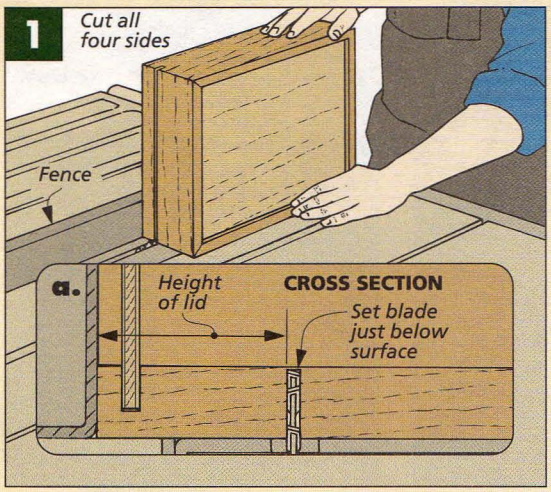

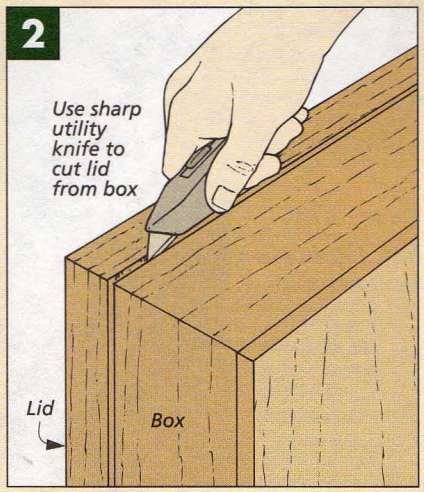

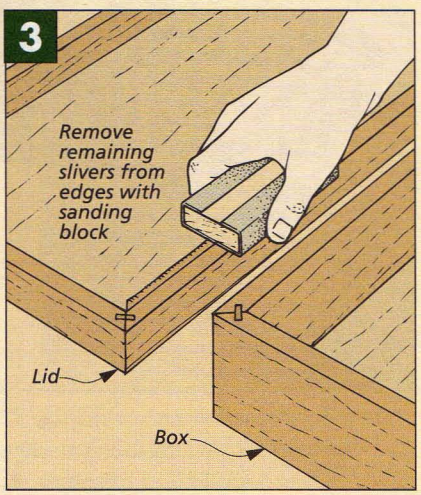

FEATURE PROJECT

CHEST-ON-CHEST

With its cherry frame and panel construction and raised panel drawers, this chest-on-chest will be an elegant focal point in any bedroom.

This project has a long history — in more ways than one. Woodworkers have been building chest-on-chest furniture for over two hundred years. And while this project isn't a historical reproduction, it got its start twelve years ago with a bedroom set that began with a lingerie chest in *Woodsmith* No. 53. (To get an idea of what all the pieces look like, check out the photo on page 35.)

Though this chest-on-chest is tall, don't let its imposing size and classic details fool you. Like the other dressers in the bedroom set, the joinery isn't complicated. The cases are made up of frame and panel assemblies built with tongue and groove joinery. And the machine-cut, half-blind dovetails make quick work of assembling all seven of the drawers. Even the bevels on the drawer fronts are easier than they look. (They're simply cut on the table saw.)

To further simplify the building process, the upper and lower chests are built separately. This also gives you the option of building (with a few minor modifications) one or both chests as separate pieces of furniture, see pair of photos below.

Chest Options ►
With a few minor modifications, either section of the chest-on-chest can be built as a separate project. The lower chest requires a solid wood top, see left photo and page 13. And the upper chest only needs a kickboard base, see right photo and page 17.

Construction Details

OVERALL DIMENSIONS:
60⅜"H x 38¾"W x 20⅜"D

Solid wood panel for top

Cove molding

3" Brass bail pull with porcelain rosettes

Cases built with frame and panel assemblies joined with tongues and grooves

Two narrow drawers separated by vertical divider

Nylon guide strip

Drawers ride on wood runners and guides

Cove molding

Threaded insert

Frame and panel assemblies have bull-nose profile on front and side edges

Raised panels on drawers cut on table saw, see page 19

Chamfers routed on outside of case and inside of frames

Cove molding

Bottom frame and panel

Kickboard miters strengthened and aligned with hardboard splines, see page 18

Drawer fronts and backs joined to sides with machine-cut, half-blind dovetails, see article on page 24

Plastic turn button catches drawer

Bullnose profile created with two round-over bits

Drawer stop

Drawers flush with case front

3" bail pull has porcelain rosettes

Drawer openings created by rails and trim pieces

SIDE SECTION VIEW

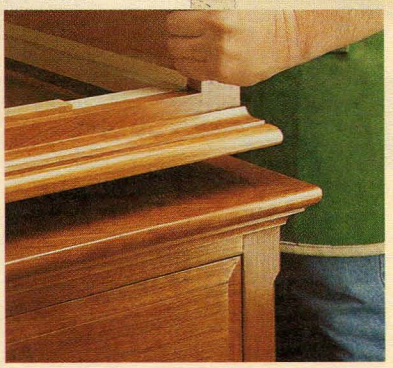

▲ *The two sections of the chest are secured with hidden threaded inserts and machine screws.*

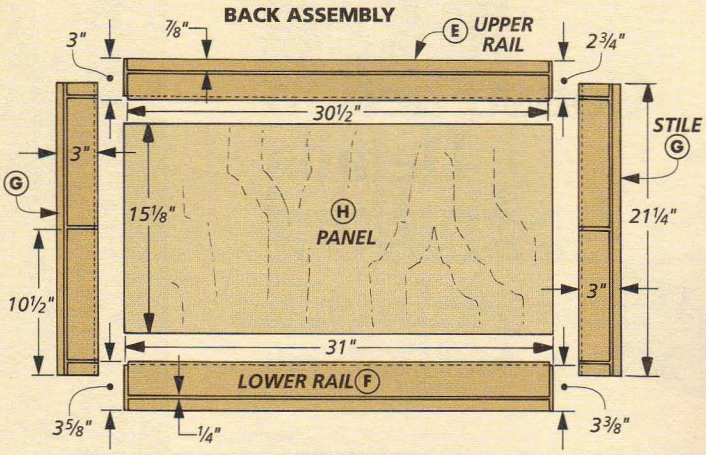

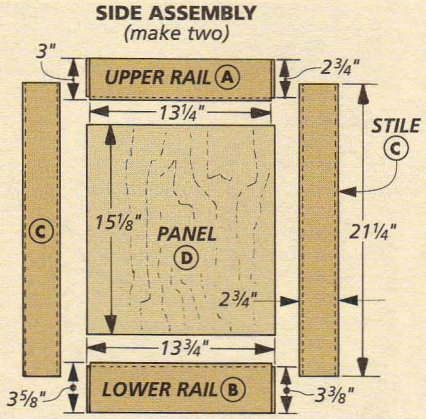

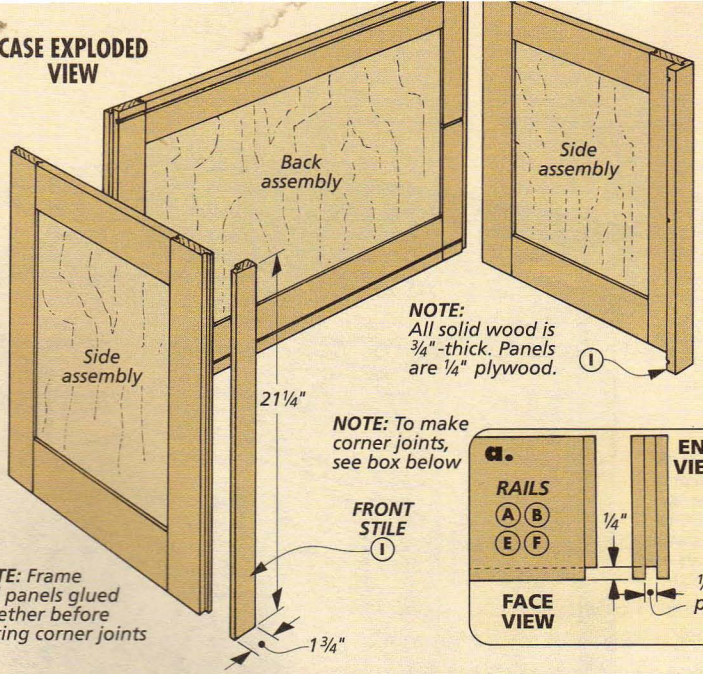

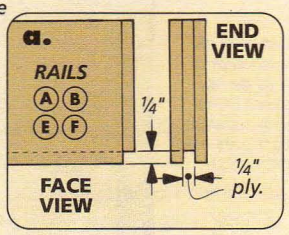

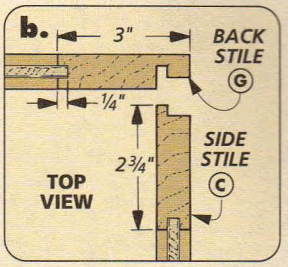

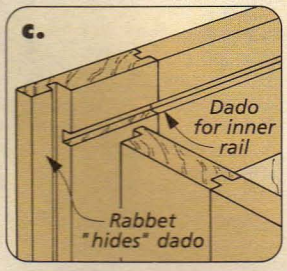

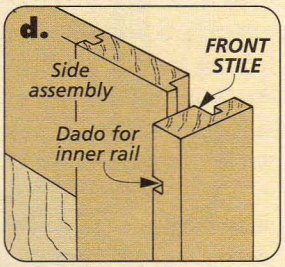

Lower Chest Case

The upper and lower chests are nearly identical, and you can start with either. I tend to work from the ground up, so I began by building the case of the lower chest, see Case Exploded View.

FRAME & PANELS. The case is made up of three frame and panel assemblies glued into a U-shape with two stile pieces added to the front, see Case Exploded View. For now, I began work on the frame pieces.

Both the sides and back have an **upper (A, E)** and **lower rail (B, F)** and two **stiles (C, G)**. And to make sure all these frame pieces didn't get mixed up, I labeled them carefully.

Next, I cut centered grooves on all the pieces to hold the plywood panels. Then to complete the frames, I cut a stub tenon on the ends of all the rails (A, B, E & F), sizing them to fit into the grooves, see detail 'a' above.

Already you're at the point where you can dry assemble the frames and cut the **side panels (D)** and **back panel (H)** to fit in the grooves. Just note the direction of the grain when cutting the back panel — it should run vertically like it does on the sides.

FRONT STILES. After the frame and panel assemblies have been glued together, the two **front stiles (I)** can be cut to size, see Case Exploded View. Then you're ready to cut the corner joints for the case.

CORNER JOINTS. The corners of the case are held together with tongue and groove joints, see box. But after cutting the groove in both the front stiles and the stiles on the back assembly, you'll need to cut an extra rabbet, see Steps 1 and 2 in box below.

At this point, it's hard to see the purpose for these rabbets. But when some dadoes are cut in the back

CORNER JOINT

Each corner of the case is held together with an ordinary tongue and groove joint. What's out of the ordinary is the rabbet cut on the grooved pieces (the front and back stiles). This rabbet "hides" some dadoes cut later so you won't be able to see them on the outside of the case.

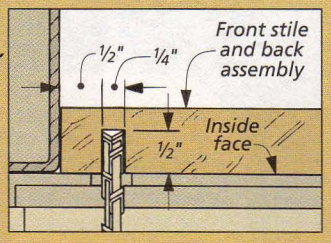

1 *First, using a 1/4"-wide dado blade, cut a groove 1/2" deep along the back assembly stiles and two front stiles.*

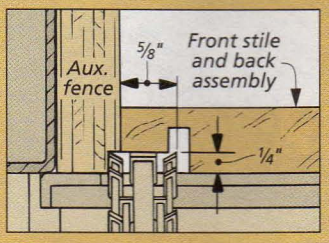

2 *Now on the same edges as the grooves, cut a 1/4"-deep rabbet with a dado blade buried in an auxiliary fence.*

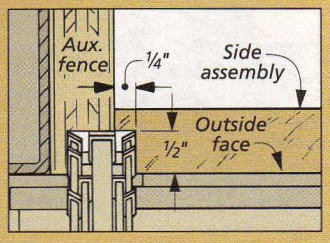

3 *Finally, tongues can be cut on the side assemblies to fit into the 1/4"-wide grooves in the back and front stiles.*

assembly and front stiles later, these rabbets will prevent the dadoes from being visible on the outside of the case, see details 'c' and 'd.'

Note: When cutting the corner joints, make sure that the good face of the plywood will end up on the outside of the case when it's assembled.

RAIL DADOES. After the mating tongues are cut on the side assemblies (Step 3 in box), the dadoes I just mentioned can be cut. These dadoes will hold rails that create the drawer openings. And their positions on the front stile and back assembly are the same, so you can cut them at the same time, see Figs. 1 and 2. But there are a couple things I should mention.

First, since the rails create the drawer openings, the center dado on each piece should be positioned carefully so the openings end up the same height. Second, the dadoes are cut 1/4" deep, but they should be a smidgen *less* than the rabbet cut earlier, refer to details 'c' and 'd' at left. The dadoes shouldn't cut across the shoulder of the rabbet, or you'll see them after the case is assembled.

ASSEMBLY. At this point, the case can be glued together, see Fig. 3. Though there are front stiles, you're basically dealing with a three-sided assembly, and keeping the corners square can be a trick. My solution was to add a "fourth" side to the assembly by clamping a temporary spacer between the sides. Still, even with the spacer, you'll want to position your clamps carefully, see margin photo at right.

INSIDE RAILS. After the glue has dried, six rails can be added to the case, see Rail Exploded View. These strengthen the front of the case and create the drawer openings, and they slide into the dadoes already cut in the case. So after cutting the **inside rails (J)** to fit between the sides (measuring at the back of the case), a tongue can be cut on each, see details 'a' and 'b.'

Gluing the inside rails is pretty straightforward — just clamp them in place. However, you won't be able to get clamps on the middle rail in back. But a couple of thin scraps will work just fine as "spring" clamps. These are simply wedged between the front and back rails, see Exploded View.

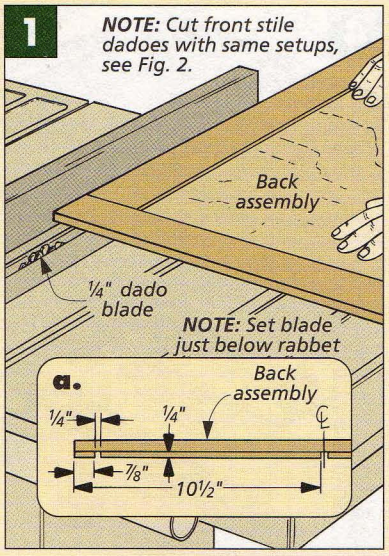

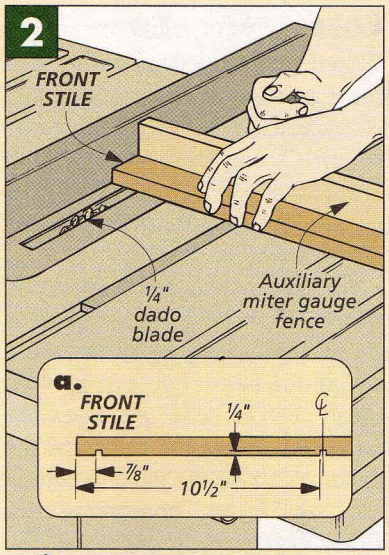

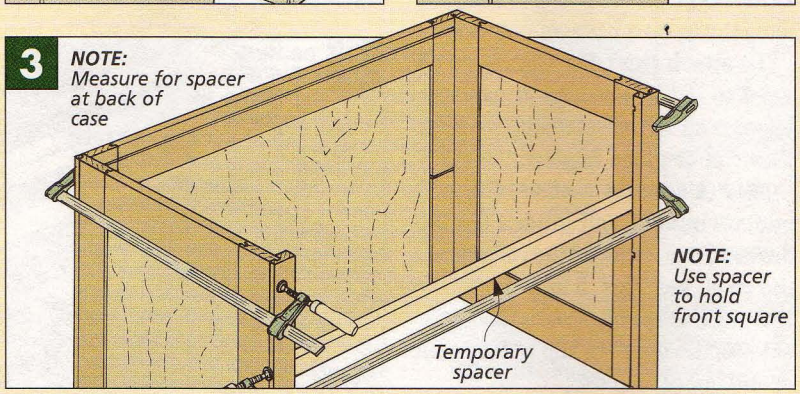

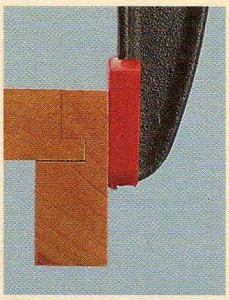

▲ *While assembling the case, position the clamp heads carefully so the front stiles will end up tight and square.*

RAIL EXPLODED VIEW

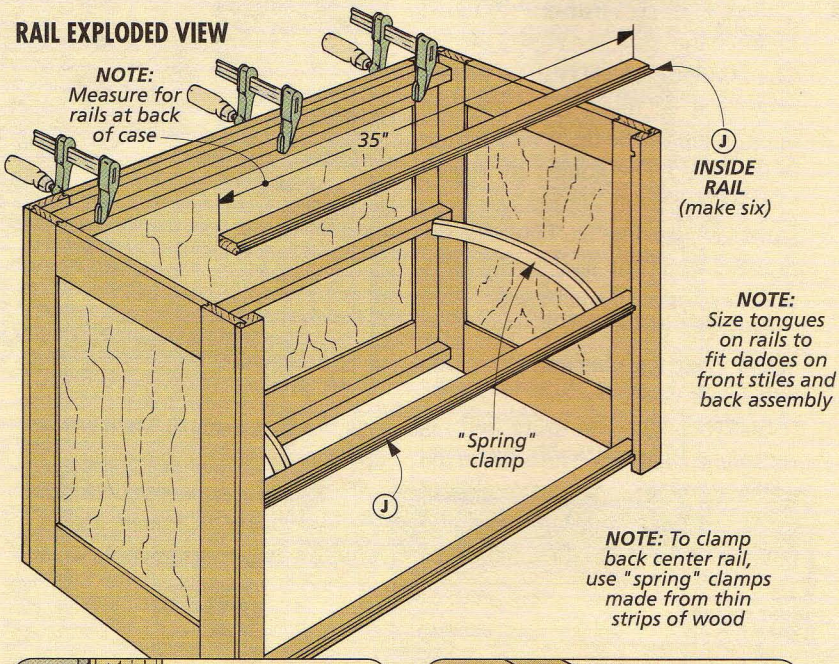

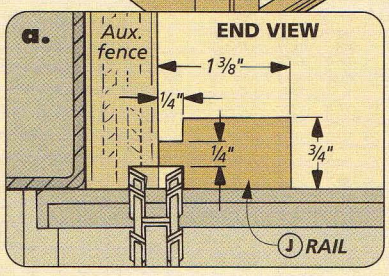

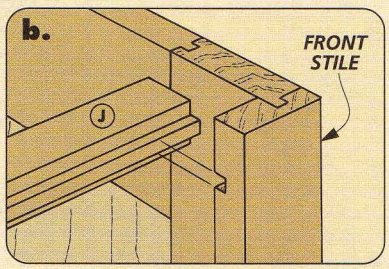

Case CONTINUED

With the rails glued inside the case, there are a few odds and ends left to complete the case. First, the front rails require some trim pieces. Then drawer runners and guides need to be added to the case. And finally, I routed some decorative chamfers.

RAIL TRIM. At this point, the inside rails aren't flush with the front of the case. But there's an easy solution. I added trim pieces cut to fit between the front stiles, see Fig. 4. The **wide trim (K)** covers the rails *and* the openings above the top and bottom rails, see Fig. 4a. The **narrow trim (L)** simply covers the middle rail, just like edging on a piece of plywood.

To attach the trim pieces, you'll need to cut grooves to fit over the tongues on the rails, see Fig. 4a. Then they can be glued in place.

DRAWER RUNNERS & GUIDES. Next, I added runners and guides for the drawers that "bridge" the rails inside the case, see Figs. 5 and 5b. These two-piece assemblies will support the sides of the drawers and guide them in and out of the case.

First, I cut six **runners (M)** to fit between the *rails*, see Figs. 5 and 5b. Then the **guides (N)** can be planed or resawn 5/8" thick. (This way, the ones on top will be flush with the top of the case.) The guides are ripped to stick out from behind the front stiles 1/32", see Fig. 5c. This way, the drawers won't rub against the stiles as they're opened and closed.

With the pieces cut to size, they can be glued together and then glued to the rails inside the case.

CHAMFERS. The last thing to do is rout some chamfers. The ones on the outside corners are no big deal. I marked the starting and stopping points and routed to the lines with a chamfer bit, see Fig. 6. Then I cleaned up the ends, see margin photo at left.

There are also stopped chamfers on the insides of the frames, and these require a different approach, see Fig. 7. Since the plywood panels get in the way of the bearing on a chamfer bit, I used a quick, shop-made jig and a V-groove bit. (I'll explain more about this procedure on page 18.)

▲ *The end of a routed chamfer isn't symmetrical, but with a dowel and some sandpaper, you can make both sides look the same.*

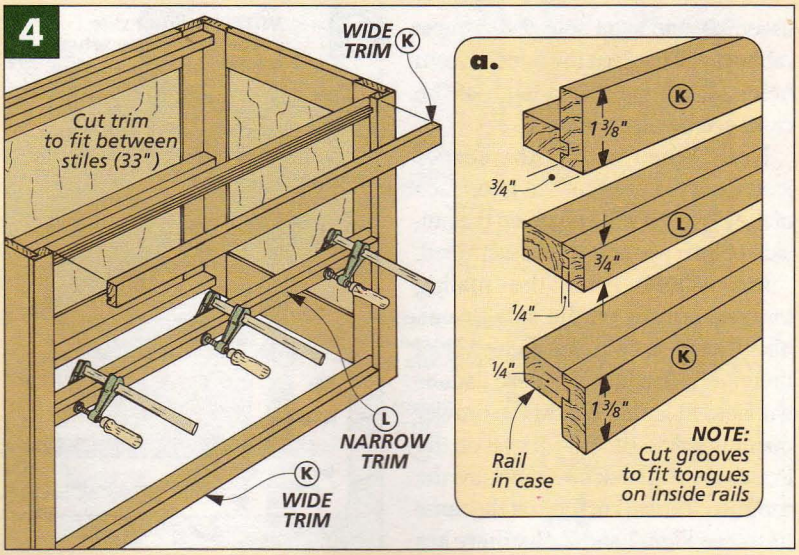

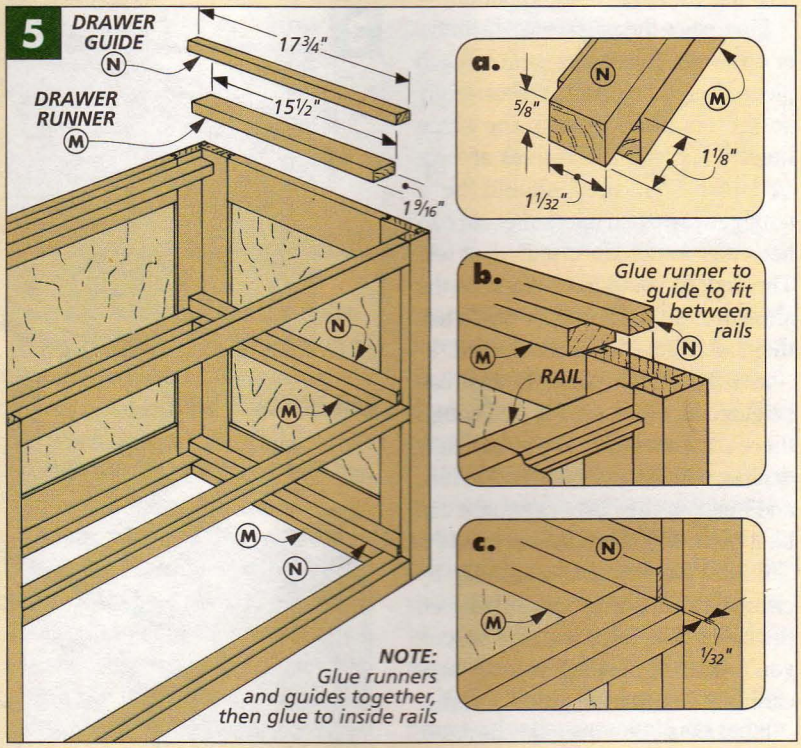

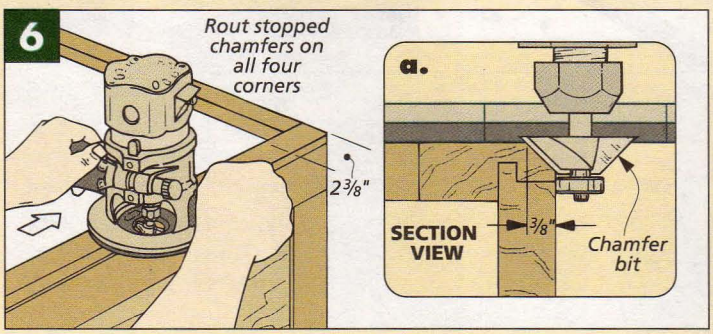

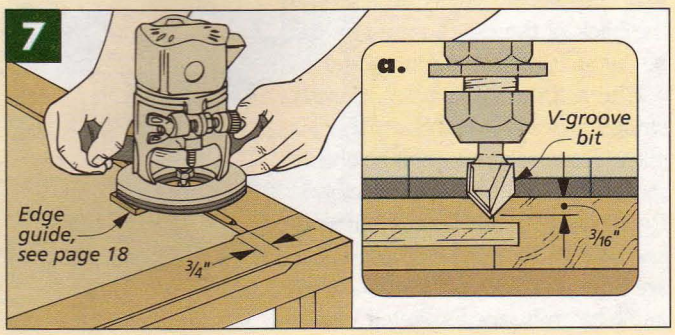

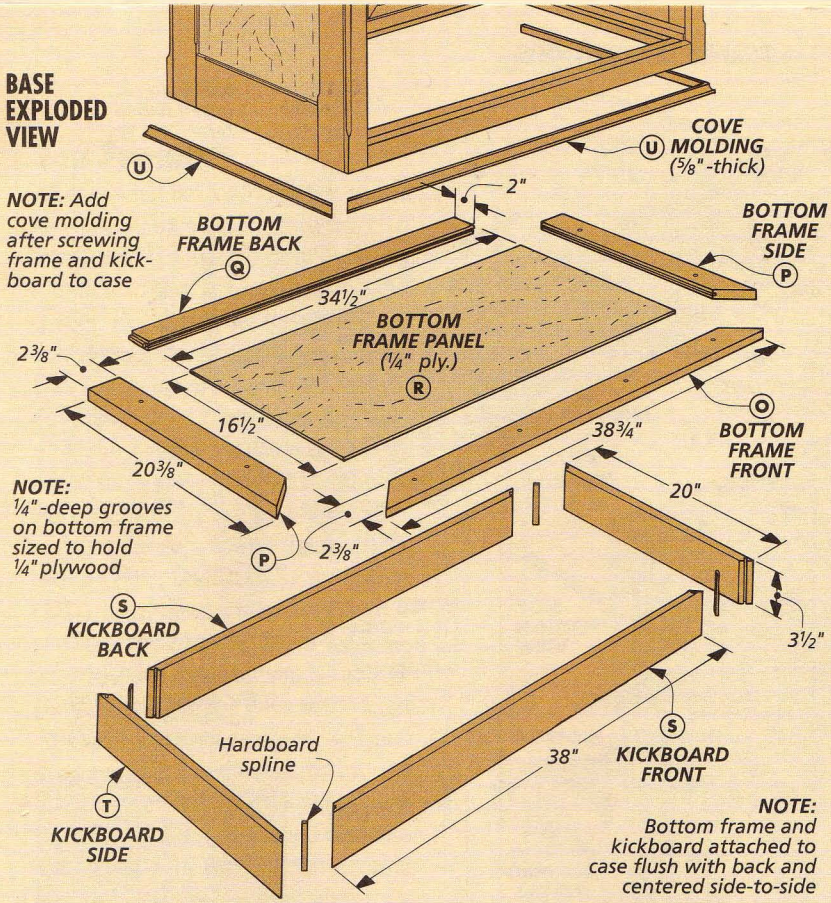

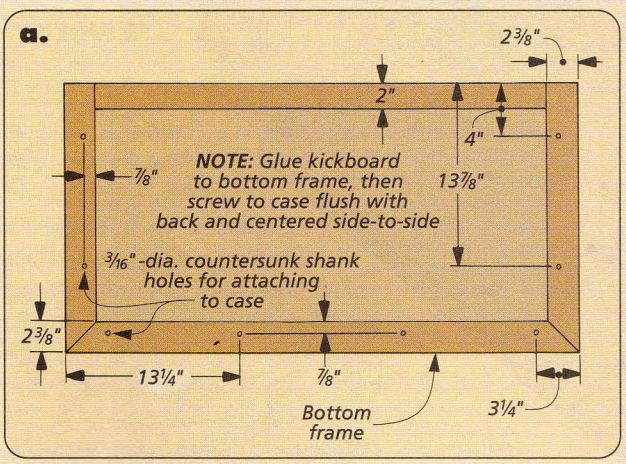

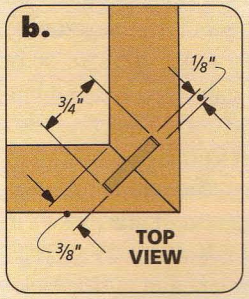

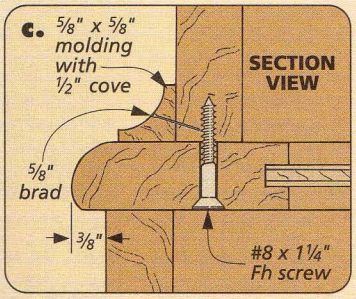

Lower Base

With the case complete, I began work on the two-part base it sits on, see Base Exploded View. This is just a frame and panel with a bullnose profile that sits on a mitered kickboard.

BOTTOM FRAME. To make the bottom frame and panel, I cut the **front (O)**, **sides (P)**, and **back (Q)** to finished width but rough length. Then to hold the 1/4" plywood panel, a centered groove is cut on each piece. The front corners are mitered so the completed frame will overhang the case 1 1/8" at the front and sides. (It's flush with the back.) The back piece is cut to fit between the sides, but remember to allow for the stub tenons that are cut to fit in the grooves.

After the **panel (R)** was cut to size and the frame was glued together, I routed a bullnose profile around the sides and front, see detail 'c.' This is done in two steps with two different-sized round-over bits. For more on this, take a look at the box below.

KICKBOARD. Next, I worked on a kickboard assembly that consists of a **front (S)**, **back (S)**, and **sides (T)**, see Base Exploded View. These pieces are mitered on both ends. (The frame will overhang the kickboard 3/8" on the front and sides, see detail 'c.')

With any frame that has beveled miters, I like to add splines to the corners, see detail 'b.' This both strengthens the frame and makes it easier to assemble. (I'll go into this process of adding splines a bit more on page 18.)

When the kickboard is assembled, you can glue it to the bottom of the bullnose frame (the face with the 1/4" radius), see detail 'c' above.

ASSEMBLY & COVE MOLDING. Now the frame and kickboard assembly can be screwed to the case, flush with the back and centered side-to-side, see details 'a' and 'c' above. Then I created some **cove molding (U)** with a 1/2" cove router bit, see detail 'c.' (Start with a 5/8"-thick blank that's extra wide. Rout the profile and then rip the molding 5/8" wide.) This molding is mitered and glued and nailed to the front and sides of the case.

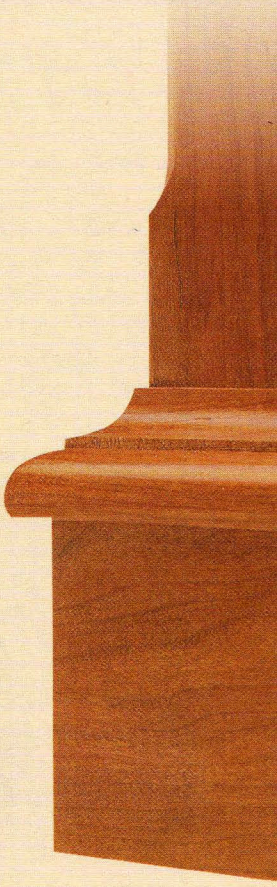

EDGE DETAIL

All the bottom and top frame assemblies have a bullnose profile. These are routed with a 1/4" roundover (raised 3/16", see Step 1) and a 1/2" roundover, see Step 2. When the frames are attached to the case, the 1/2" roundover should face *towards* the case, while the 1/4" edge faces *away* from the case.

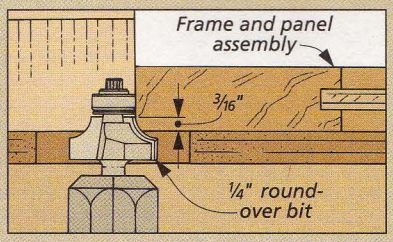

1 *The first step to routing the bullnose is to rout a 1/4" roundover with the bit raised 3/16" above the table.*

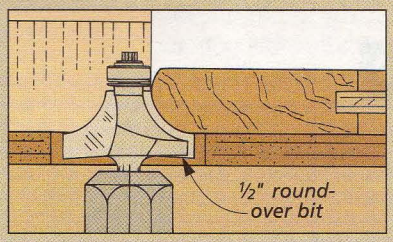

2 *Now on the opposite edge of the frame, rout a 1/2" roundover, using the fence to guide the assembly.*

Drawers

With the base of the lower chest complete, I began work on the two large drawers, see Drawer Exploded View. These feature raised panel fronts and half-blind dovetails that I routed with a common router jig, see page 24.

CUT TO SIZE. The first thing to do is cut the **drawer fronts (V)** to size from 3/4"-thick stock and the **backs (W)** to the same size from 1/2" maple, see Exploded View. These pieces are sized so that when the assembled drawers are placed into the case, there will be a 1/16" gap at the top and bottom and on each side. Then the **sides (X)** can be cut from 1/2" maple.

After routing the half blind dovetails on each piece, I cut a groove in each to hold a **bottom (Y)**. Don't worry too much about the exact dimensions here. The important thing with this groove is that it's sized to hold 1/4" plywood and is centered on the bottom tail on the side pieces.

RAISED PANELS. Before assembling the drawers, there's still a couple of things to do. First, I cut the raised panels on all the fronts, see detail 'b.' This can be done on the table saw, with the blade tilted 12° and a tall auxiliary fence added to support the fronts. (See page 19 for more.)

DRAWER EXPLODED VIEW

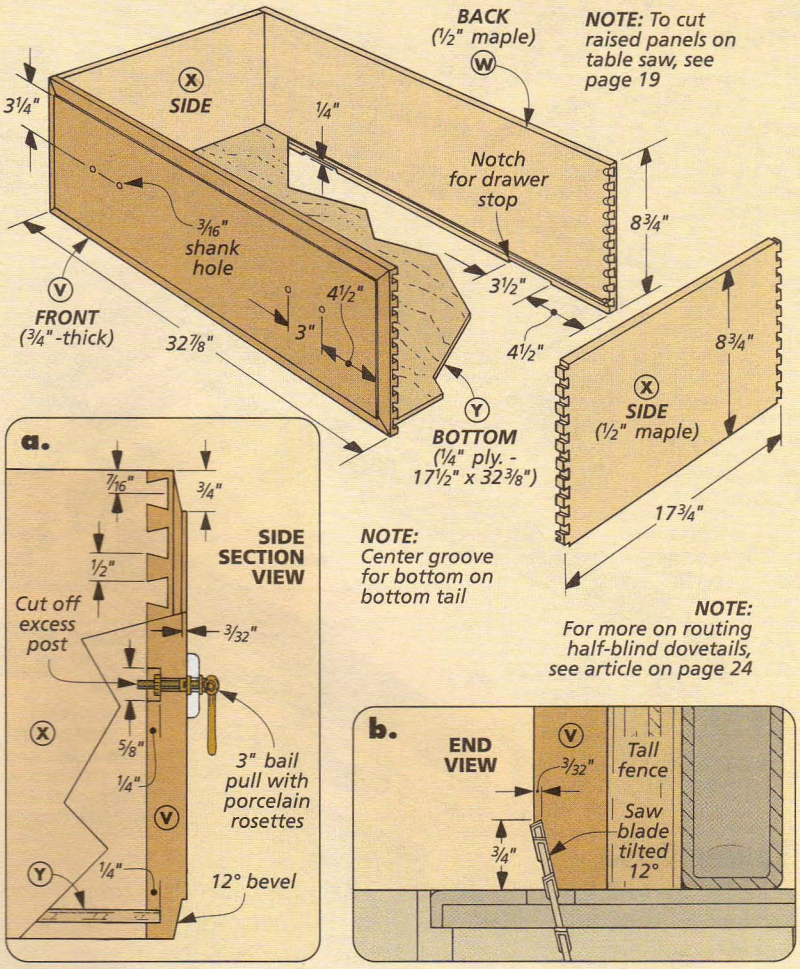

Second, two notches are cut in each back piece so they will fit over the drawer stops that will be added later.

PULLS. After assembling the drawers, I added the bail-style pulls, see detail 'a.' My first inclination was to center the mounting holes top to bottom. But looks are deceiving here. The holes actually need to be drilled above center. Plus, since the pulls are mounted with a threaded post and a nut, I drilled a counterbore inside the drawer to hide the nut and post. (I also trimmed the post slightly.)

GLIDE STRIPS. Now all that's left are some little details to add to the case that will make the drawer easier to open and close. First, I added nylon glide tape to each runner, see Fig. 8. This makes the drawer slide more smoothly, but it also "lifts" the drawer off the rail and trim, reducing wear.

Next, I added two 1/4"-thick **stops (Z)** to the rails below the drawers, see Fig. 8. They stop the drawers flush with the front of the case. And since there will be twelve stops (including the upper chest), I made a rabbeted spacer to position them. The shoulder of this spacer rests on top of the rail and matches the thickness at the edge of the drawer front, see Fig. 8a.

Finally, I screwed a turn button to the rails that are *above* the drawers so you can't accidentally pull the drawers all the way out, see Fig. 9.

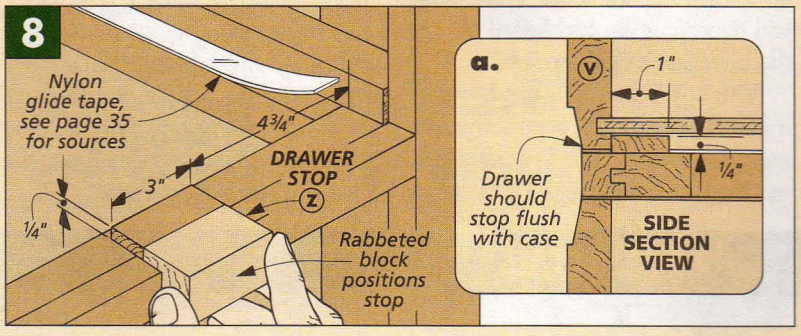

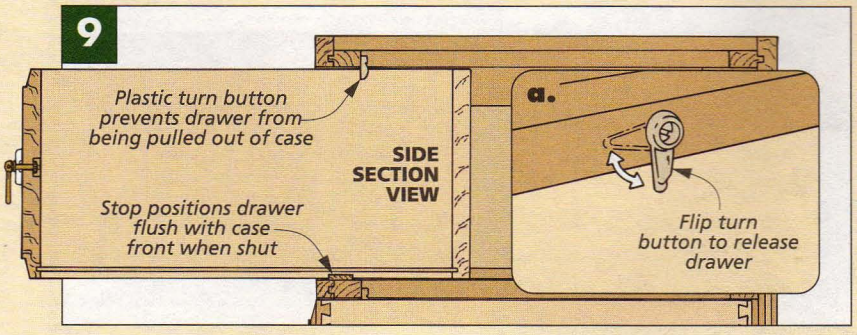

Top Frame

All that's left is to add the top to the case, see Top Exploded View. This frame and panel assembly is nearly identical to the bottom one you built earlier. But this time, the pieces are wider so you can attach the upper and lower chests with threaded inserts and machine screws later. And second, the profile on the edge is oriented different — the ½" roundover will end up on the bottom of the frame.

After the **top frame front (AA), sides (BB), back (CC)**, and **panel (DD)** have been glued together, it can be screwed to the top of the case, and the cove molding can be added. But first, to fill in the gaps at the front and back, I added a couple ⅝"-thick **spacers (EE)**, see detail 'b.'

OPTIONAL TOP. If you're just building the lower chest, you'll want to make a solid wood top instead of the frame and panel assembly. Just glue up a panel and cut it to size (20⅜" x 38¾"), see right margin photo. Then rout the bullnose profile on the front and sides and screw it to the case. (You'll want to add the spacers here too.)

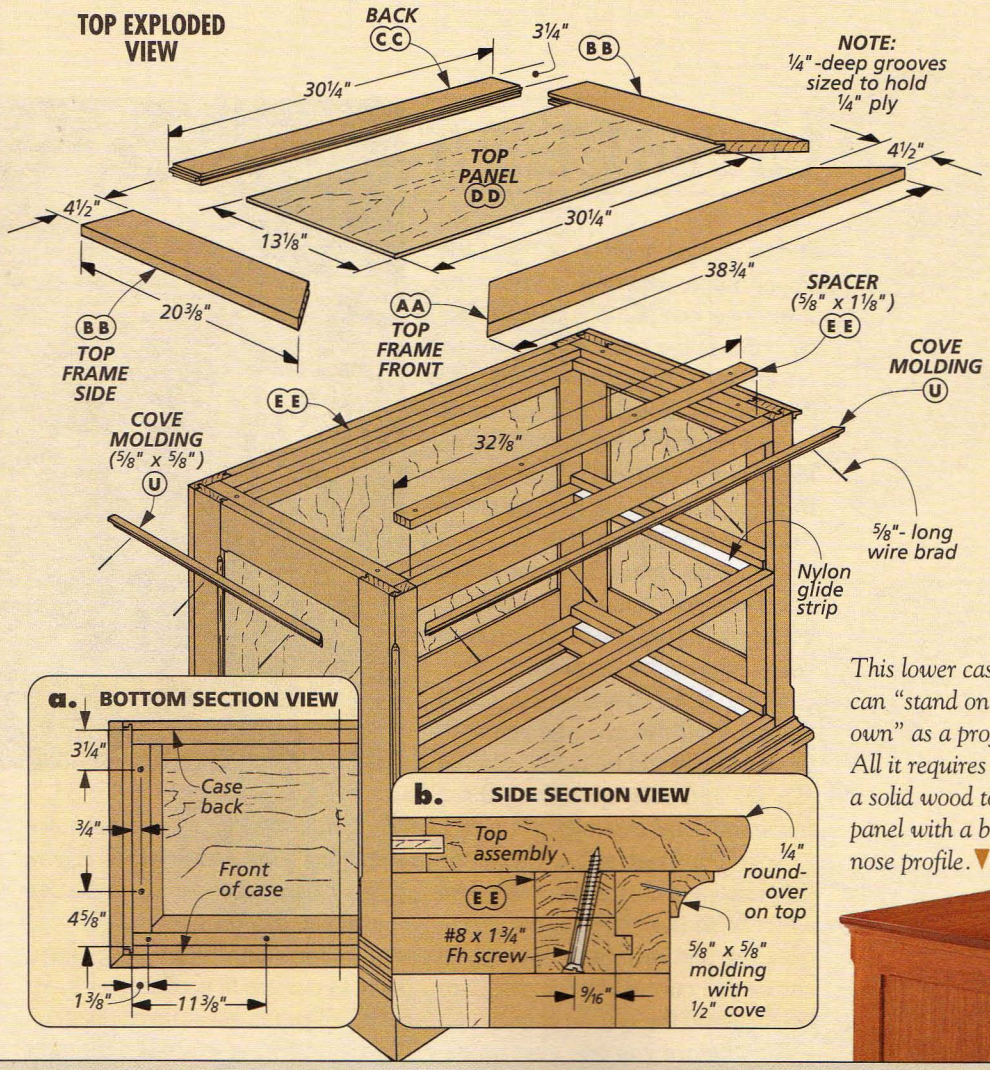

This lower case can "stand on its own" as a project. All it requires is a solid wood top panel with a bullnose profile.

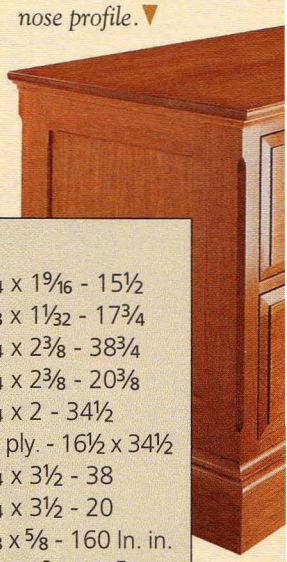

LOWER CHEST MATERIALS & CUTTING DIAGRAM

A	Upr. Side Rails (2)	¾ x 3 - 13¾	**G**	Back Stiles (2)	¾ x 3 - 21¼	**M**	Drawer Runners (6)	¾ x 1 9/16 - 15½
B	Lwr. Side Rails (2)	¾ x 3⅝ - 13¾	**H**	Back Panel (1)	¼ ply. - 31 x 15⅛	**N**	Drawer Guides (6)	⅝ x 1 1/32 - 17¾
C	Side Stiles (4)	¾ x 2¾ - 21¼	**I**	Front Stiles (2)	¾ x 1¾ - 21¼	**O**	Btm. Frame Fr. (1)	¾ x 2⅜ - 38¾
D	Side Panels (2)	¼ ply. - 13¾ x 15⅛	**J**	Inside Rails (6)	¾ x 1⅜ - 35	**P**	Btm. Frame Sds. (2)	¾ x 2⅜ - 20⅜
E	Upr. Back Rail (1)	¾ x 3 - 31	**K**	Wide Trim (2)	¾ x 1⅜ - 33	**Q**	Btm. Frame Bk. (1)	¾ x 2 - 34½
F	Lwr. Back Rail (1)	¾ x 3⅝ - 31	**L**	Narrow Trim (1)	¾ x ¾ - 33	**R**	Btm. Frame Pnl. (1)	¼ ply. - 16½ x 34½
						S	Kickboard Fr./Bk. (2)	¾ x 3½ - 38
						T	Kickboard Sides (2)	¾ x 3½ - 20
						U	Cove Molding (1)	⅝ x ⅝ - 160 ln. in.
						V	Drawer Fronts (2)	¾ x 8¾ - 32⅞
						W	Drawer Backs (2)	½ x 8¾ - 32⅞
						X	Drawer Sides (4)	½ x 8¾ - 17¾
						Y	Drawer Btms. (2)	¼ ply. - 17⅝ x 32⅜
						Z	Drawer Stops (4)	¼ x 1 - 3
						AA	Top Frame Fr. (1)	¾ x 4½ - 38¾
						BB	Top Frame Sds. (2)	¾ x 4½ - 20⅜
						CC	Top Frame Bk. (1)	¾ x 3¼ - 30¼
						DD	Top Frame Pnl. (1)	¼ ply. - 13⅛ x 30¼
						EE	Spacers (2)	⅝ x 1⅛ - 32⅞

¾" x 5¼" - 96" Cherry (Two Boards @ 3.5 Bd. Ft. Each)

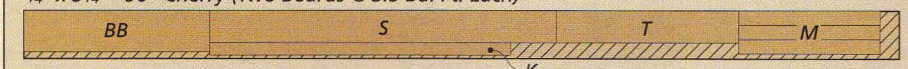

¾" x 7" - 96" Cherry (Two Boards @ 4.7 Bd. Ft. Each)

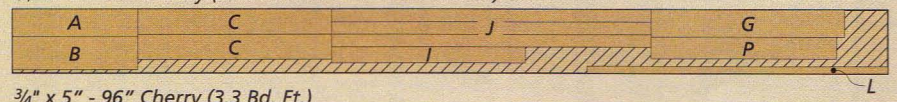

¾" x 5" - 96" Cherry (3.3 Bd. Ft.)

¾" x 5" - 96" Cherry (3.3 Bd. Ft.)

¾" x 4¾" - 84" Cherry (Two Boards @ 2.8 Bd. Ft. Each)

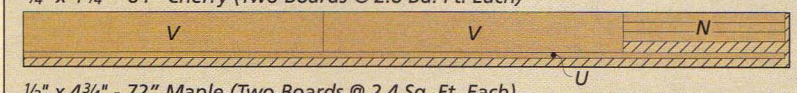

½" x 4¾" - 72" Maple (Two Boards @ 2.4 Sq. Ft. Each)

½" x 4¾" - 72" Maple (Two Boards @ 2.4 Sq. Ft. Each)

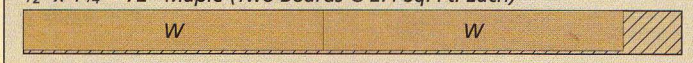

ALSO NEEDED: *One 48" x 48" sheet of ¼" cherry plywood and one 48" x 48" sheet of ¼" maple plywood*

- (4) 3" Brass Bail Pulls w/Porcelain Rosettes
- (2) Plastic Turn Buttons w/Screws
- (1) 6'-long Nylon Glide Strip
- (8) #8 x 1¾" Fh Woodscrews
- (8) #8 x 1¼" Fh Woodscrews
- (20) ⅝"-long Wire Brads

UPPER CHEST

It doesn't take long to see that the upper unit is nearly identical to the lower one, see photo. The case construction is the same, and the drawers are too. There are a few notable differences, though. There are two narrow drawers at the top; there's no kickboard (unless you're building just this unit, see box on page 17), and the top is a solid wood panel.

SIDE & BACK PANELS. Like the lower unit, I began by building the side and back panels, see Case Exploded View below. After cutting the **side** and **back rails (A, B, E, F)** and **stiles (C, G)** to size, I cut the grooves and stub tenons that would hold their **panels (D, H)** and then glued the three frame and panel assemblies together.

Next, the **front stiles (I)** can be cut to size, and the tongue and groove joints (with the extra rabbet on the front stile and back assembly) can be cut for the corners of the case, see detail 'b' and the box on page 8.

Now before you can glue up the case, there are a few dadoes to cut. These will hold the inner rails, so you'll need to cut five dadoes in the front stiles and back assembly, see Exploded View and detail 'a.' Again, position the dadoes carefully. The bottom three drawer openings should end up the same — you don't want to have to custom fit each drawer.

When you've got all the dadoes cut, the case can be assembled. This chest is slightly taller than the lower unit, but the assembly is exactly the same. The number of pieces is the same, and I used a temporary spacer at the front to hold the case square just like I did before, refer to Fig. 3 on page 9.

INNER RAILS & TRIM. After the glue has dried, I cut ten **inside rails (J)** to fit between the sides of the case, see Fig. 1. Tongues are cut on these rails to fit into the dadoes in the front and back of the case, and then the rails can be glued in place. Here again, you'll need to use "spring" clamps

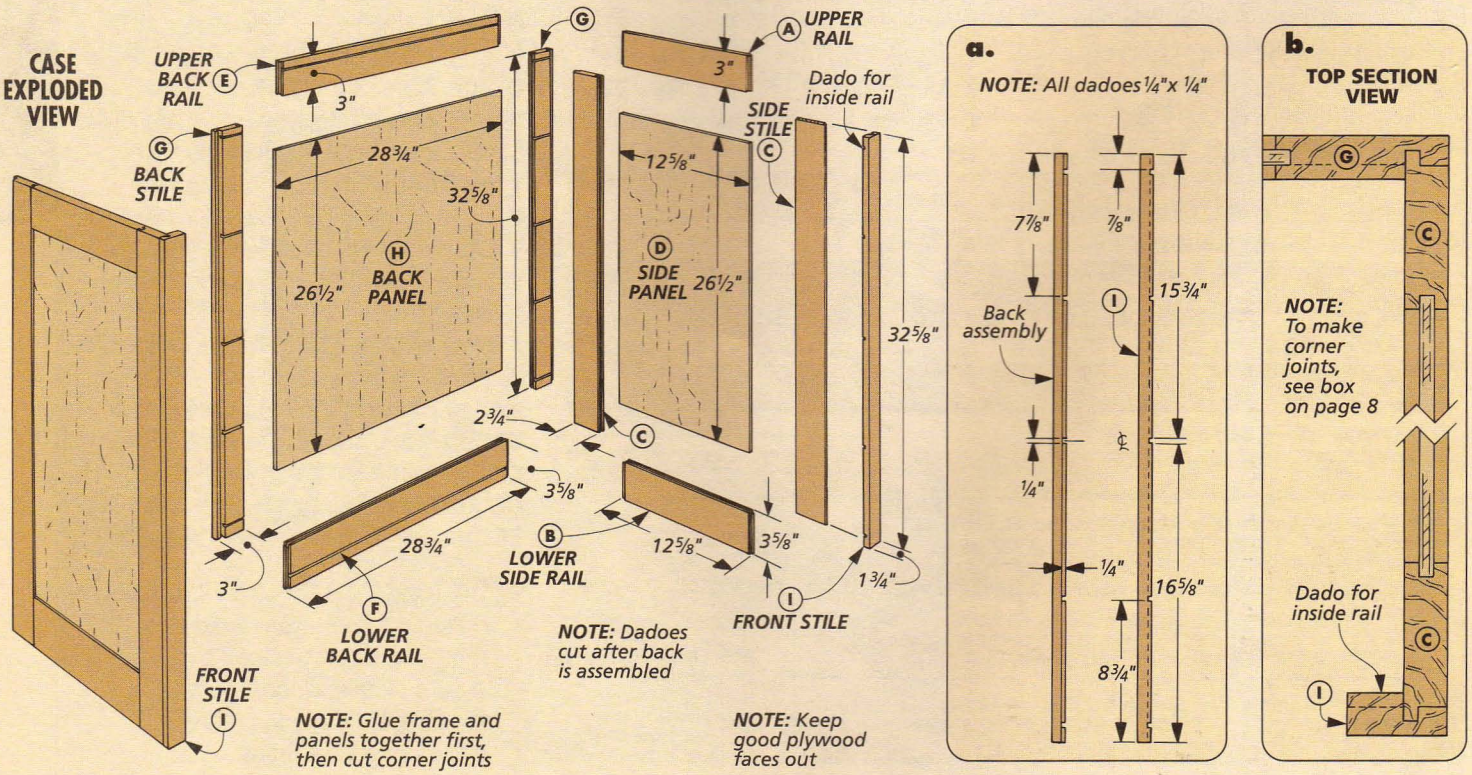

(thin strips of wood) to hold the middle back rails in place, refer to the Rail Exploded View on page 9.

Next, the **wide (K)** and **narrow trim (L)** can be cut to size, and the grooves that fit over the tongues on the rails can be cut, see Figs. 1 and 1a.

After the trim has been glued in place, the chamfers on the inside and outside of the case are ready to be routed. These are identical to the ones on the lower case, and I used the same jig for routing around the insides of the frames, see page 18.

With the chamfers routed, it's time to work on the pieces inside the case that support and guide the drawers. As on the lower chest, the ten **drawer runners (M)** and **guides (N)** will end up glued together as a single assembly, with the runners fitting between the rails and the guides resting on top of the rails, see Figs. 1b and 1c. But the important thing is that when these assemblies are added to the case, the guides need to stick out past the front stiles 1/32" so the drawers don't rub against the stiles, see Figs. 1c and 1d.

DRAWER DIVIDER. At this point, there are a couple of "new" pieces to add to the case. To divide the top opening in half for the two narrow drawers, a vertical divider and an additional guide and runner assembly need to be added, see Figs. 2 and 3.

The **center divider (O)** is simply a 3/4"-thick piece of stock that's cut to fit between the upper two rails, see Fig. 2. As I was measuring for the divider, I noticed a slight bow in one of the rails. This isn't uncommon since the case is fairly wide. And the solution is simple. I measured the height between the rails at the *side* of the case, where there was no chance of bowing. Then after cutting the divider to this length, it can be screwed in place, centered side-to-side and flush with the front edge, see Fig. 2a.

CENTER RUNNER & GUIDE. With the divider in place, the last pieces to add are the **center runner (P)** and **guide (Q)**, see Fig. 3. These do the same thing as the other runner and guide assemblies. But here, the pieces extend past the center divider on *both* sides, so one runner and guide will work for both drawers, see Fig. 3a. (When glued in place, the guide should stand proud of the divider 1/32" on each side.) Also, to fit behind the drawer divider, the runner sets back from the end of the guide only 3/8" in the front, see Figs. 2a and 3.

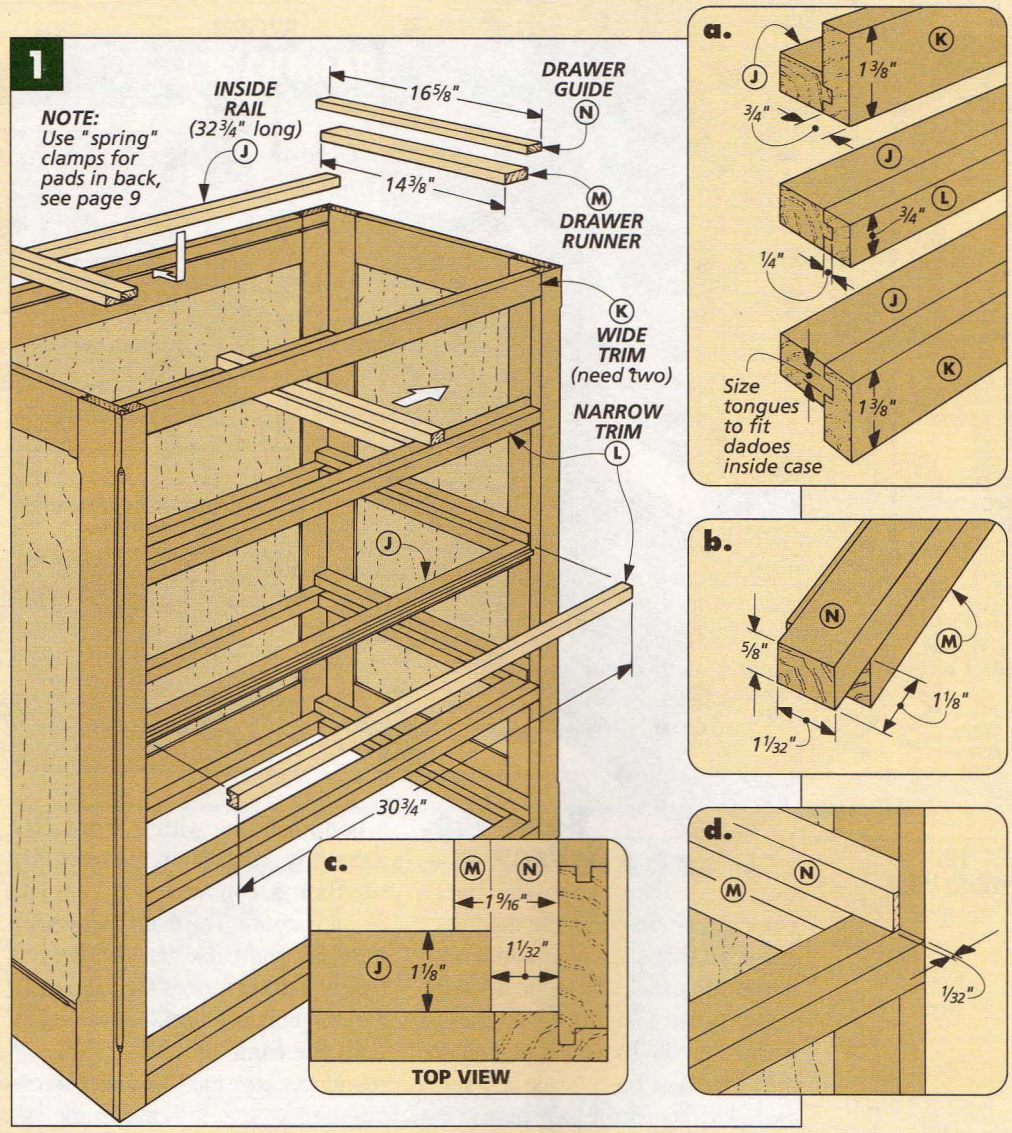

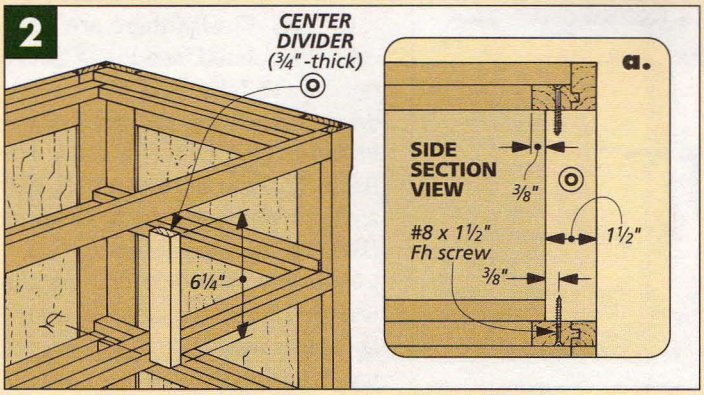

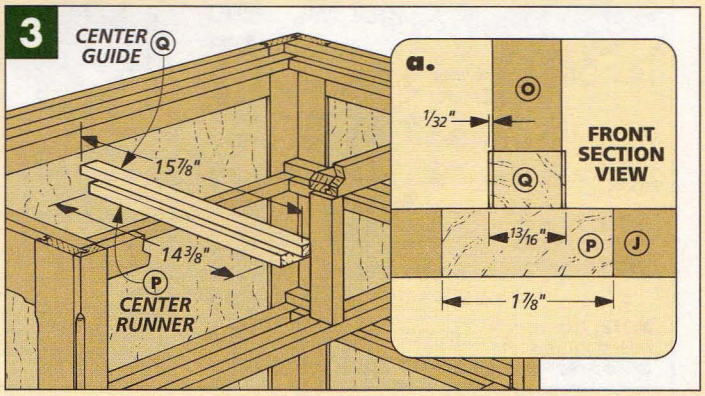

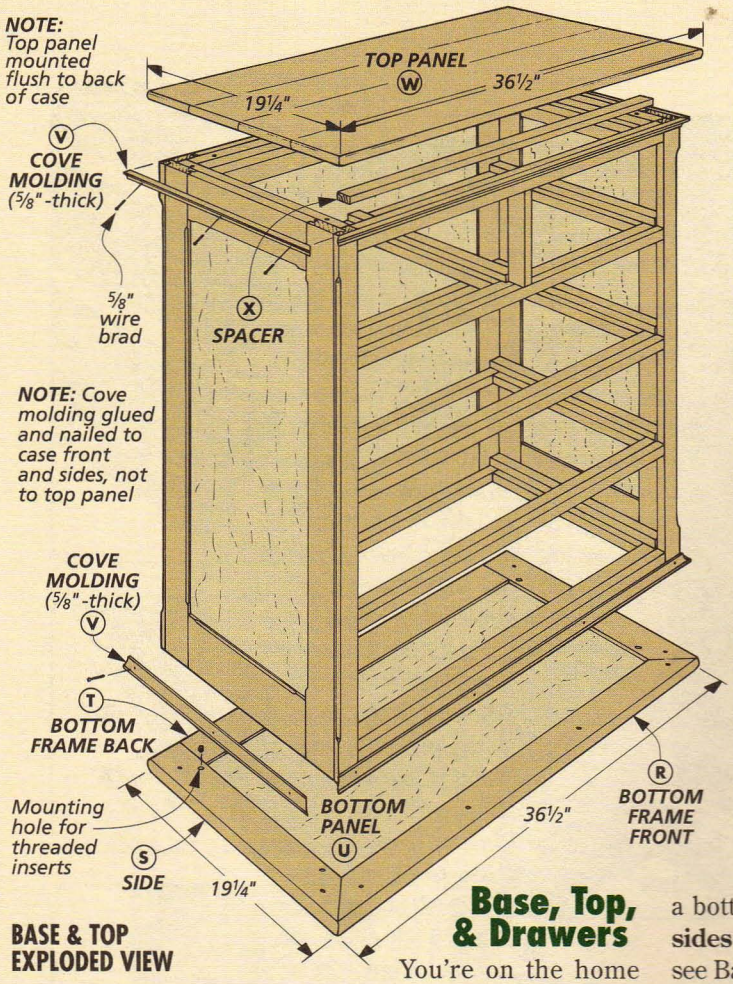

BASE & TOP EXPLODED VIEW

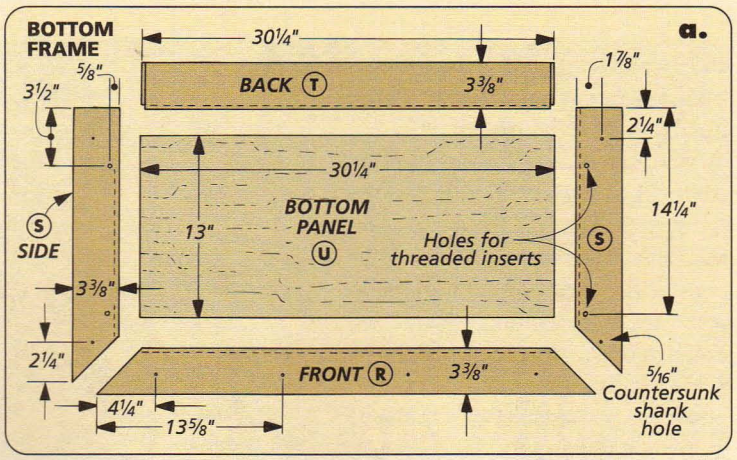

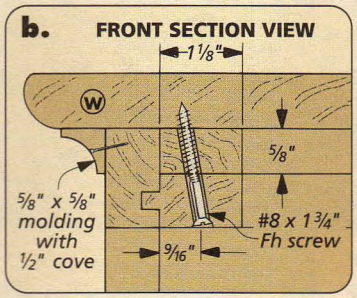

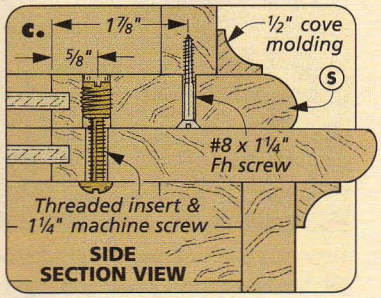

Base, Top, & Drawers

You're on the home stretch now. To complete the upper chest, all that's left is to add a base frame, top panel, and some drawers.

BASE FRAME. Like the lower chest, I worked on the base first. But where the lower base has a frame and panel *and* a kickboard, the base here is just a bottom frame with a **front (R)**, **sides (S)**, **back (T)**, and **panel (U)**, see Base & Top Exploded View and detail 'a' above. The front corners are mitered (the back has stub tenons that fit in the grooves for the panel), and the bullnose profile is routed on both the front and sides. (The ½" roundover is on top.) And after screwing the frame to the case, some ⅝"-thick **cove molding (V)** can be glued and nailed to the case, see detail 'c.'

Note: If you're building the upper chest by itself, you'll need to build a kickboard for it, see box on next page.

TOP. The top of this chest is solid wood. So rather than make a frame and panel assembly, I glued up a ¾"-thick **top panel (W)** and cut it to finished size, see Exploded View above.

Like the top on the lower chest, this panel still gets the bullnose roundover (with the ½" roundover on the bottom this time). And when attaching it to the case, it requires the same **spacers (X)**. But this time, the shank holes should be oversized so the panel can expand and contract, see detail 'b.' This expansion and contraction also means you don't want to glue or nail the cove molding to the solid wood top — only to the sides of the case.

DRAWERS. Finally, there are a few drawers to build, see Fig. 4. You'll need three large and two narrow drawers. The **large** and **small drawer fronts (Y, CC)** are ¾" thick. The **backs (Z, DD)** and **sides (AA, EE)** are ½"-thick maple, and the **bottoms (BB, FF)** are ¼" plywood.

As before, I joined the drawers with half-blind dovetails routed with a dovetail jig (see page 24) and cut the raised panels on the table saw (see page 19).

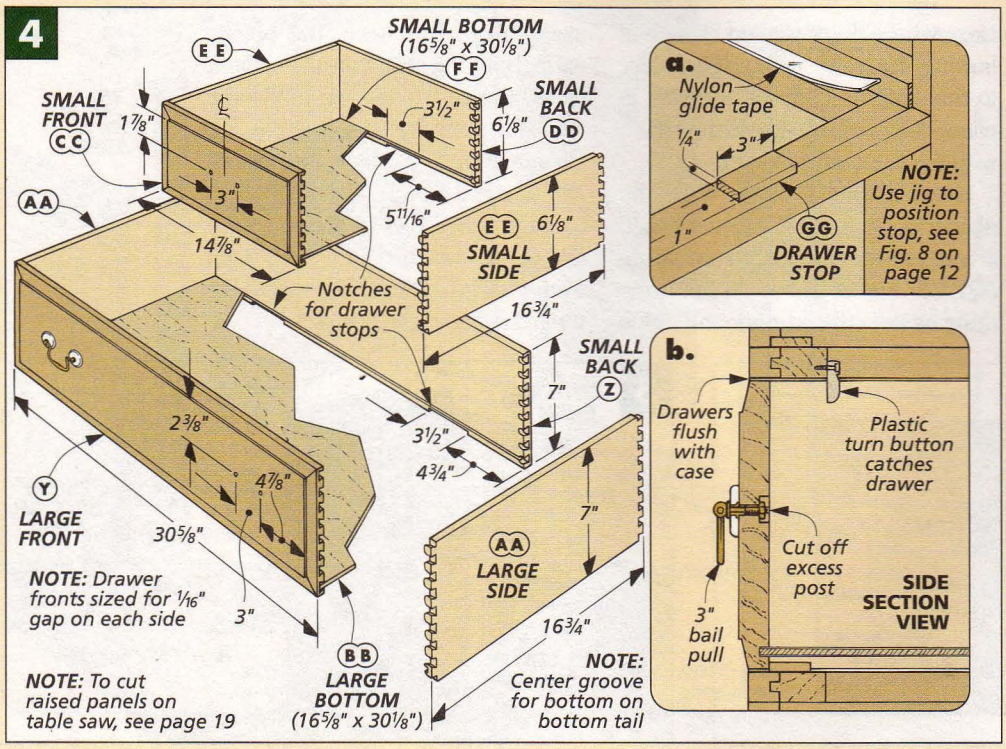

And inside the case, I added nylon glide tape, 1/4"-thick **drawer stops (GG)**, and plastic turn button catches, see Figs. 4a and 4b. But note that on the small drawers, there's only one stop centered in the opening (and one notch cut on the drawer back).

ATTACH UPPER & LOWER CHESTS. Finally, you can attach the upper and lower chests. To secure the two, I mounted four threaded inserts into the bottom of the upper chest, see details 'a' and 'c' in the Exploded View at left.

To get a threaded insert in straight can be a real trick, and I typically use a nut and a section of a bolt chucked into a drill press, turning the chuck by hand. But here, I had to use a shop-made hand tool to get the insert in straight, see page 19. Then I drilled the mounting holes in the lower chest and attached the two with machine bolts, see detail 'c' in the Exploded View on previous page.

OPTIONAL KICKBOARD BASE

The upper chest can also be built as a stand-alone piece of furniture. (It'll end up 37 5/8" tall.) All you need to do is build a kickboard that's sized so the bottom frame overhangs it 3/8" on the front and sides, see drawing and detail 'a' below. Adding splines to the corners will make the assembly easier (and stronger), see page 18. To attach the kickboard, first glue it to the bottom frame and then screw the assembly to the case.

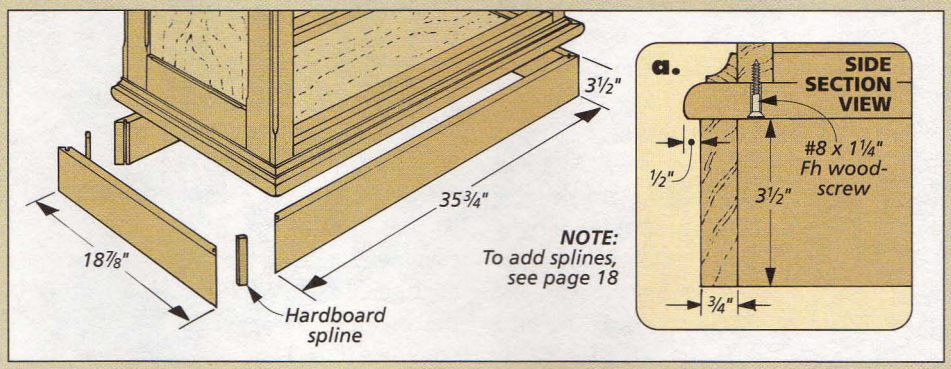

UPPER CHEST MATERIALS & CUTTING DIAGRAM

A	Upr. Side Rails (2)	3/4 x 3 - 12 5/8	**F**	Lwr. Back Rail (1)	3/4 x 3 5/8 - 28 3/4	**K**	Wide Trim (2)	3/4 x 1 3/8 - 30 3/4
B	Lwr. Side Rails (2)	3/4 x 3 5/8 - 12 5/8	**G**	Back Stiles (2)	3/4 x 3 - 32 5/8	**L**	Narrow Trim (3)	3/4 x 3/4 - 30 3/4
C	Side Stiles (4)	3/4 x 2 3/4 - 32 5/8	**H**	Back Panel (1)	1/4 ply. - 28 3/4 x 26 1/2	**M**	Drawer Runners (10)	3/4 x 19/16 - 14 3/8
D	Side Panels (2)	1/4 ply. - 12 5/8 x 26 1/2	**I**	Front Stiles (2)	3/4 x 1 3/4 - 32 5/8	**N**	Drawer Guides (10)	5/8 x 1 1/32 - 16 5/8
E	Upr. Back Rail (1)	3/4 x 3 - 28 3/4	**J**	Inside Rails (10)	3/4 x 1 3/8 - 32 3/4	**O**	Vertical Divider (1)	3/4 x 1 1/2 - 6 1/4
						P	Dwr. Ctr. Runner (1)	3/4 x 1 7/8 - 14 3/8
						Q	Dwr. Ctr. Guide (1)	3/4 x 13/16 - 15 7/8
						R	Btm. Frame Fr. (1)	3/4 x 3 3/8 - 36 1/2
						S	Btm. Frame Sds. (2)	3/4 x 3 3/8 - 19 1/4
						T	Btm. Frame Bk. (1)	3/4 x 3 3/8 - 30 1/4
						U	Btm. Frame Pnl. (1)	1/4 ply. - 13 x 30 1/4
						V	Cove Molding (1)	5/8 x 5/8 - 150 ln. in.
						W	Top Panel (1)	3/4 x 19 1/4 - 36 1/2
						X	Spacers (2)	5/8 x 1 1/8 - 30 5/8
						Y	Lg. Drawer Fronts (3)	3/4 x 7 - 30 5/8
						Z	Lg. Drawer Backs (3)	1/2 x 7 - 30 5/8
						AA	Lg. Drawer Sides (6)	1/2 x 7 - 16 3/4
						BB	Lg. Dwr. Btms. (3)	1/4 ply. - 16 5/8 x 30 1/8
						CC	Sm. Dwr. Fronts (2)	3/4 x 6 1/8 - 14 7/8
						DD	Sm. Dwr. Backs (2)	1/2 x 6 1/8 - 14 7/8
						EE	Sm. Dwr. Sides (4)	1/2 x 6 1/8 - 16 3/4
						FF	Sm. Dwr. Btms. (2)	1/4 ply. - 16 5/8 x 14 3/8
						GG	Drawer Stops (8)	1/4 x 1 - 3

- (8) 3" Brass Bail Pulls w/Porcelain Rosettes
- (5) Plastic Turn Buttons w/Screws
- (1) 15' Nylon Glide Strip
- (8) #8 x 1 3/4" Fh Woodscrews
- (8) #8 x 1 1/4" Fh Woodscrews
- (20) 5/8"-long Wire Brads
- (4) 1/4"-20 x 1 1/4" Rh Machine Screws
- (4) 1/4"-20 Brass Threaded Inserts

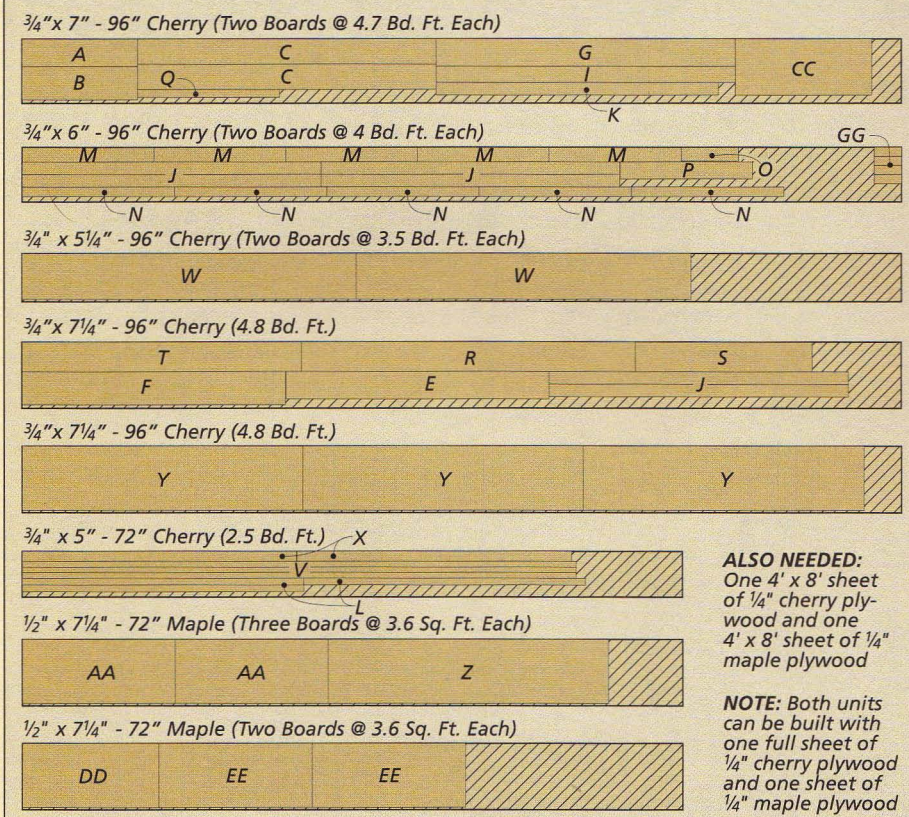

ALSO NEEDED: *One 4' x 8' sheet of 1/4" cherry plywood and one 4' x 8' sheet of 1/4" maple plywood*

NOTE: *Both units can be built with one full sheet of 1/4" cherry plywood and one sheet of 1/4" maple plywood*

SHOP NOTES

Routing Inside Chamfers

To create a chamfer, I typically use a router and a chamfer bit. But with the stopped chamfers on the *inside* edges of the frames on the chest-on-chest (page 6), the panels interfered with the bearing on the bit.

Instead I used a V-groove bit with a shop-made edge guide, see drawing at right. A V-groove bit has no bearing to get in the way, and the guide keeps the bit a uniform distance from the piece. Plus it automatically starts and stops the chamfer at each corner.

To make the edge guide, first replace the original router base with one made from 1/4" hardboard, see drawing at right. The guide is another piece of hardboard cut 1 1/2" wide. When gluing this rectangular piece to the new base, just be sure that it's centered on the point of the V-groove bit (so there's 3/4" on either side of the bit), see detail 'a' below right.

Before routing the frame, turn on the router and raise the bit into the guide until it's at the right height. Then rout the chamfer, using the edge guide to start and stop the chamfer along each edge, see Figs. 1 and 2. W

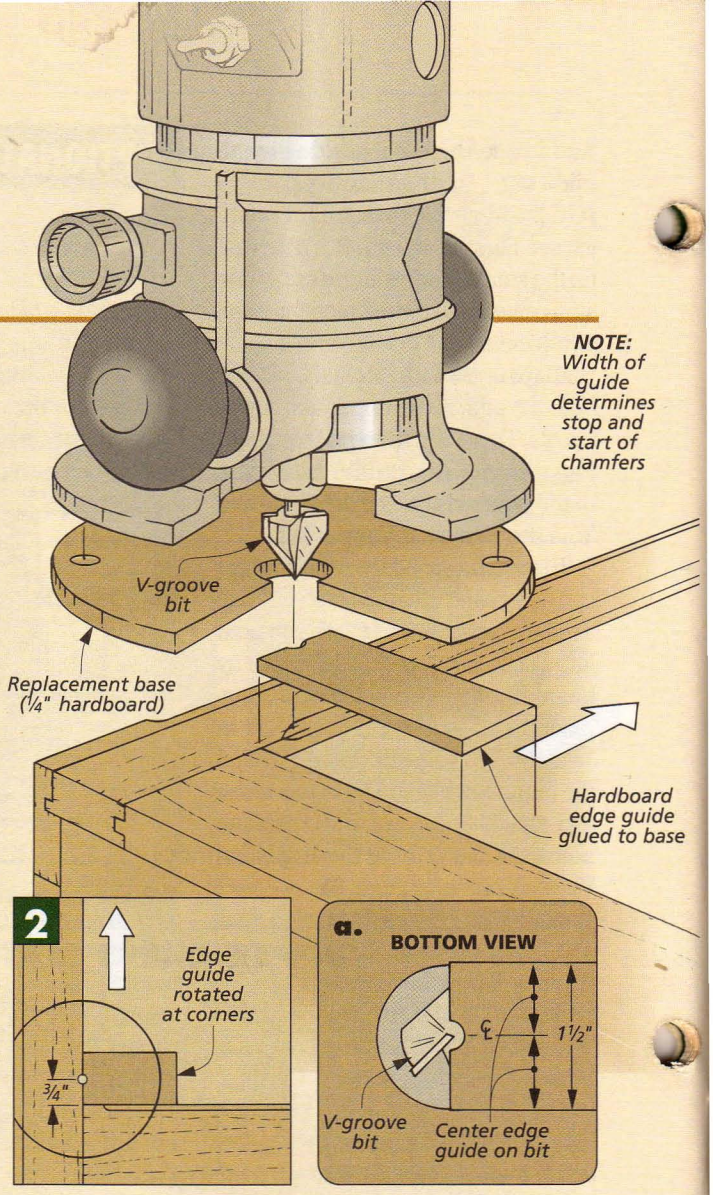

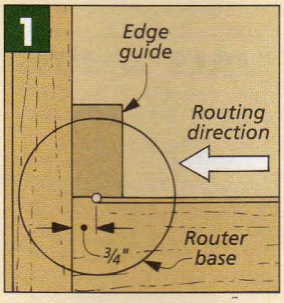

Miter & Spline Joint

The kickboard base of the chest-on-chest is joined with miters, and I decided to add splines to the corners for a couple reasons, see photo. First, a spline stengthens a miter joint by providing more glue surface. Second (and more importantly), miters tend to slide out of alignment as you glue and clamp the pieces together, and the splines help keep everything aligned.

CUT KERFS. The first thing to do is cut the kerfs for the splines. To do this, simply lower the saw blade after cutting the miters, but keep the blade tilted 45°. Then slide the rip fence over to act as a stop, see Fig. 1.

This is simple enough, but there are a few things to keep in mind. I like to cut the kerf closer to the inside corner (the heel) rather than the tip, see Fig. 2. This way, the tip isn't as likely to break if the joint is stressed. Plus, this lets me insert a wider spline to provide more glue surface.

SPLINE. Next, splines can be cut to fit in the kerfs. Since the splines here were hidden, I used 1/8" hardboard rather than cut solid wood splines. (But if you do use solid wood splines, the grain should run *across* the joint.) And just to be on the safe side, I cut my splines slightly narrower than the depth of both kerfs, so the spline won't prevent the miter from closing completely. W

▲ *A hardboard spline will strengthen a miter and make it easier to assemble.*

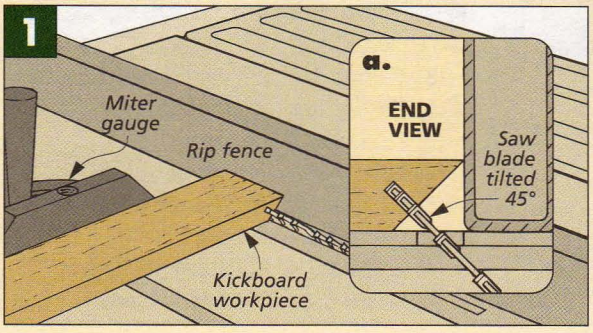

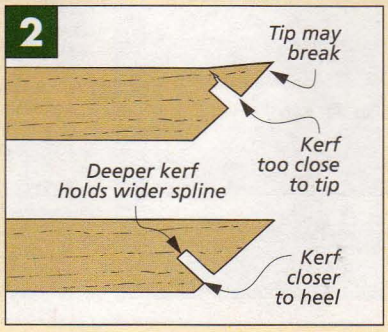

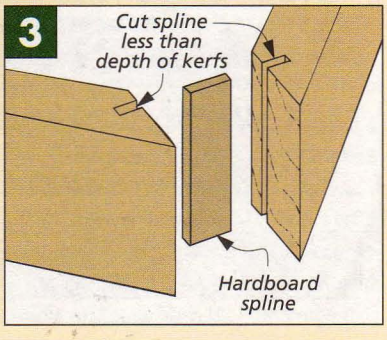

Threaded Inserts

When it was the time to attach the upper and lower units of the chest-on-chest, I had a few threaded inserts to install, see margin photo. This is usually done with a nut, a bolt, and a ratchet. The trick with this procedure is keeping the insert straight as you're driving it into the wood — it's not as easy as you might think. So to help install the insert in the upper units, I got out a hand-held threaded insert tool that I'd made earlier, see photo below.

The tool is just a block of hardwood with a 3/4"-deep notch cut in one corner, see drawing. A counterbored hole is drilled through the notch to hold a 1/4"-20 hexhead bolt and a nylon bushing. The through hole is sized to hold the bolt, and the 1/2"-dia. counter bore is drilled 1 1/4" deep to accept the 1/4" i.d. bushing that holds the bolt straight while you tighten it down.

Finally, between the bushing and the nut and washer that are tightened against the insert, I added a spring. It provides just enough downward pressure to help the threads on the outside of the insert to begin cutting into the wood. W

▲ *Threaded inserts (and machine screws) allow you to join two pieces so they can be disassembled easily later.*

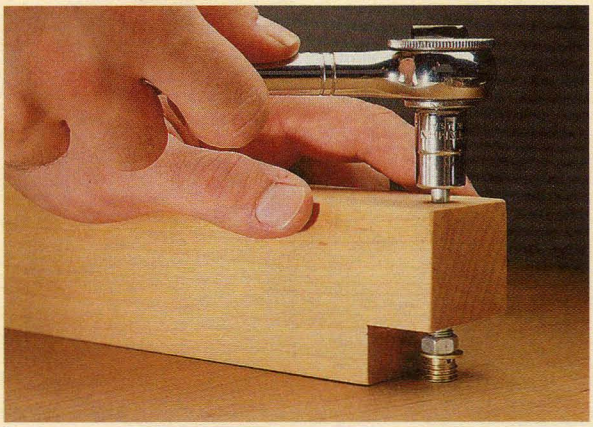

▲ *This simple tool makes it easy to install a threaded insert straight. A nylon bushing and a spring help hold the threaded insert upright as it's driven into the workpiece.*

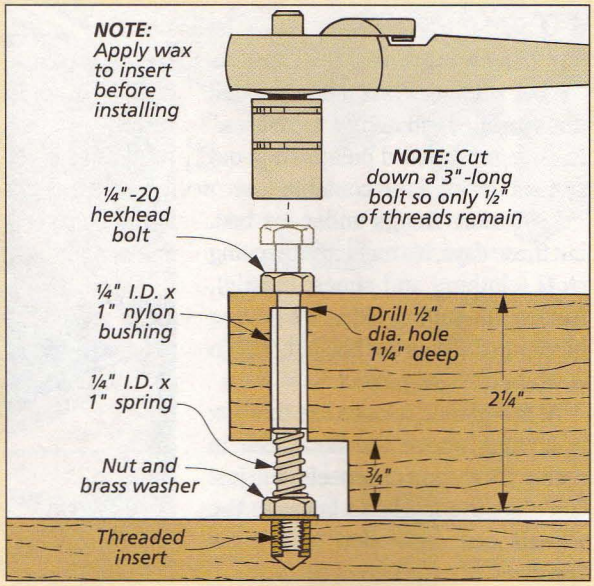

Raised Panels on the Table Saw

Many raised panels have a slightly curved profile that requires a special router bit. But the raised panels on the drawers of the chest-on-chest are simple bevels, and you can cut them easily on your table saw, see Fig. 1 below. But there are a couple of tips I can pass along to make the job go easier and so you end up with smooth, clean bevels and square shoulders.

TABLE SAW SETUP. The first thing you'll need to do is add a tall auxiliary fence to your rip fence, see Fig. 1. Cutting the bevels on the long edges is no problem, but when standing the pieces on end, you'll want extra support.

With the auxiliary fence in place, tilt the saw blade (12°) and raise it to the correct height (3/4"), see Fig. 1. Then using a test piece, you can sneak up on the position of the fence until the shoulder of the profile is 3/32", see Fig. 1a.

Now that the fence is set, you can begin cutting the bevels on the drawer fronts. I like to cut across the short, end grain edges first. This way, if there's any chipout near the tail end of the bevel, it will be removed when the bevel is cut on the longer face grain edges.

SANDING. Even a sharp saw blade will probably leave some swirl marks, so after the raised panels have been cut, the last step is to sand the bevels. But there's also another little area that needs some attention. Since the blade was tilted, the 3/32" shoulder will be slightly undercut. To square this up, I made a sanding block that has a bevel cut on one edge, see Figs. 2 and 2a. W

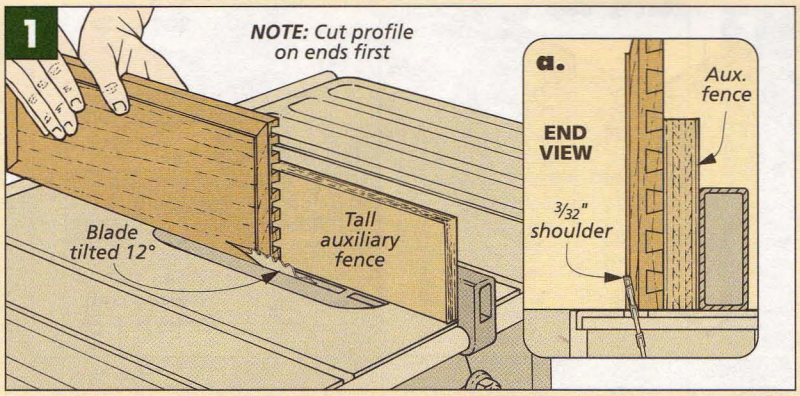

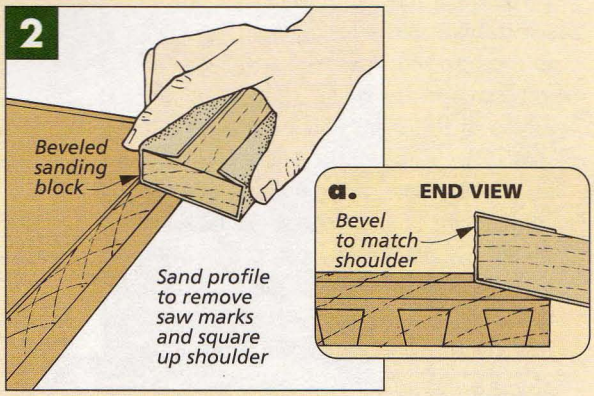

UNDER-BED STORAGE BOX

This handy rolling storage box will help you turn the unused space under your bed into a convenient storage area for clothes or children's toys.

When I was growing up, I remember keeping a box under my bed that was filled with all my "treasures." Each night, I would pull the box out and sift through the contents.

I still store things under my bed, but these days, it's much less exciting stuff (clothing and shoes, mostly). And as I'm getting older, it's getting harder to the haul the box out. Which is why I like this project.

At first glance, it looks like this box is floating above the floor. But in reality, it's resting on wheels. You just can't see them. That's because the wheels are concealed in narrow "pockets" at each end of the box.

The point of all this is that the wheels make it a lot easier to pull the box out from under the bed. Then after you've taken out (or put away) your things, the whole box rolls back under the bed, out of sight. And it's a lot kinder on my back.

JOINERY. The corners of this box are joined with machine-cut dovetail joints. If you've never used a dovetail jig before, this is a good project to start with. And if dovetails don't interest you, we've provided an alternate method for joining the corners of the box.

▲ *With the lid closed, this storage box rolls easily underneath the bed. A handle is built into the front edge of the lid.*

BOX CONSTRUCTION

The box frame is made up of six pieces — a front and back and *four* end pieces, see the Box Exploded View. Two of these ends are dovetailed to join with the front and back. But the other

RABBET JOINERY

If you don't have a dovetail jig, you can use rabbet joints to connect the ends of the box with the front and back. All you have to do is cut rabbets on the edges of the front and back pieces to match the width of the ends, see detail 'a.' (Make sure your dadoes are the same depth as your rabbets so the holes for the wheels line up correctly.) Then just assemble the box with glue and counterbored screws, plugging the screw holes with wood plugs, see drawing.

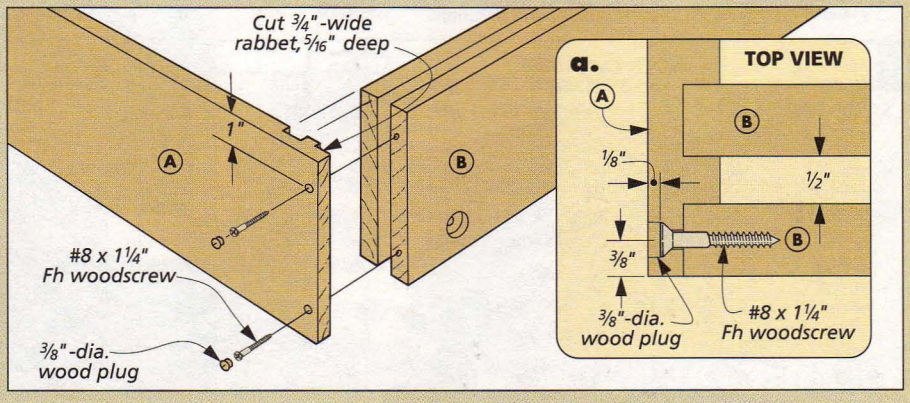

two will fit into dadoes cut near the ends of the front and back pieces. This double-wall construction creates the cavity for the wheels.

CUT PIECES. To build the box, I began by planing all my stock to a uniform thickness (3/4"). Shop Note: This is important for the dovetail jig to work properly. Then I cut the **front** and **back (A)** and the **ends (B)** to size, see Exploded View.

DRILL HOLES. Before starting on the dovetails, I drilled the holes in the end pieces for the wheel hardware, see detail 'a.' It's easier to drill the holes at this point, before the box is assembled. You just have to position the holes carefully so they will line up exactly when the box is assembled. To do this, I used a drill press with a fence and a stop block.

I started by drilling the counterbores first. After laying out the hole locations on all four pieces, I set up a stop block on the fence of my drill press, see Fig. 1. Then I drilled a 1"-dia. counterbore on one end of each piece, see Fig. 1a.

Now without moving the fence or stop, drill a hole through each piece using a 5/16"-dia. bit, see Fig. 1b. When you're finished with these holes, set up the stop block on the other end of the fence and repeat the procedure to drill the holes and counterbores on the opposite ends of the workpieces.

ROUT DOVETAILS. Once the holes are drilled, you can rout the dovetails on the front, back, and two ends, see Figs. 2 and 2a. (Note: Make sure the counterbores are on the *outside* faces when routing the dovetails.) And if you don't want to use dovetails, you can try an alternate joinery method, see the box on the opposite page.

CUT DADOES. The interior end pieces are joined to the front and back with a simple dado joint, see Fig. 3. The width of the dado should match the thickness of your stock. (I made mine 3/4" wide.) But to determine the depth of the dadoes, you'll need to measure the length of the dovetails on the end piece, see Fig. 3a. This way, all four end pieces will fit between the front and back of the box.

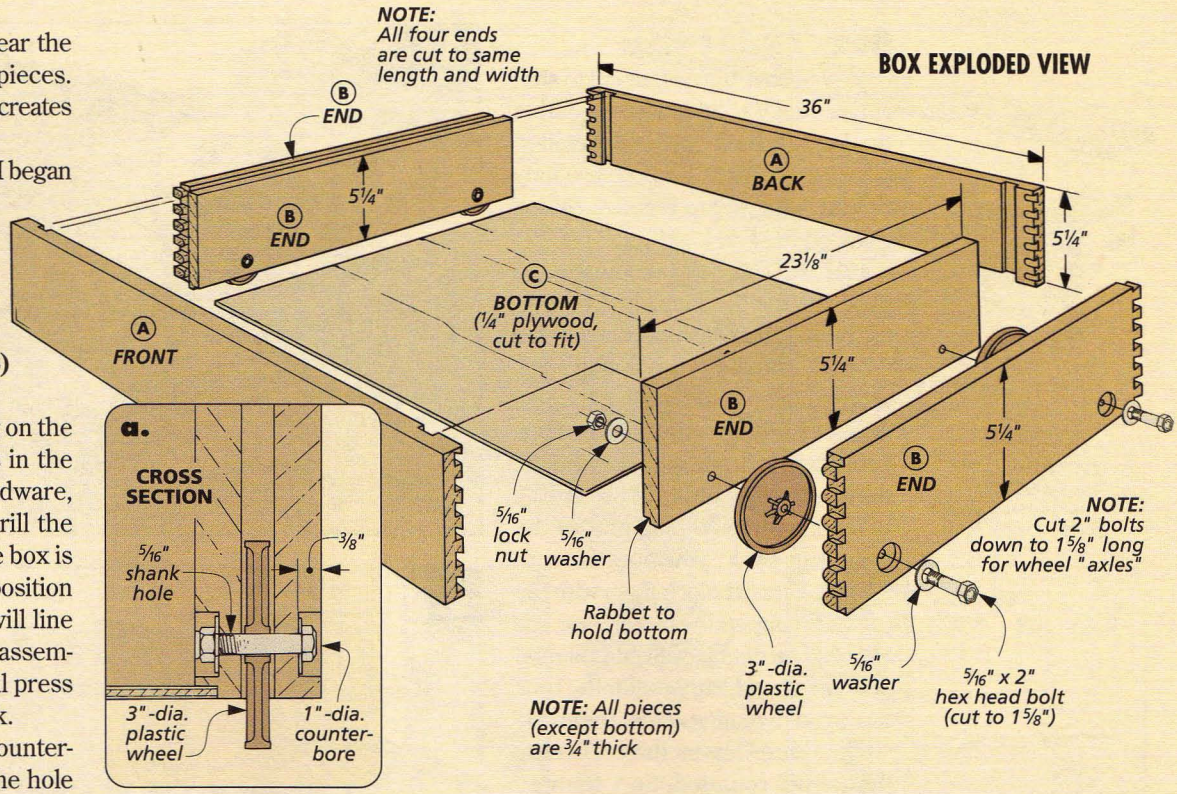

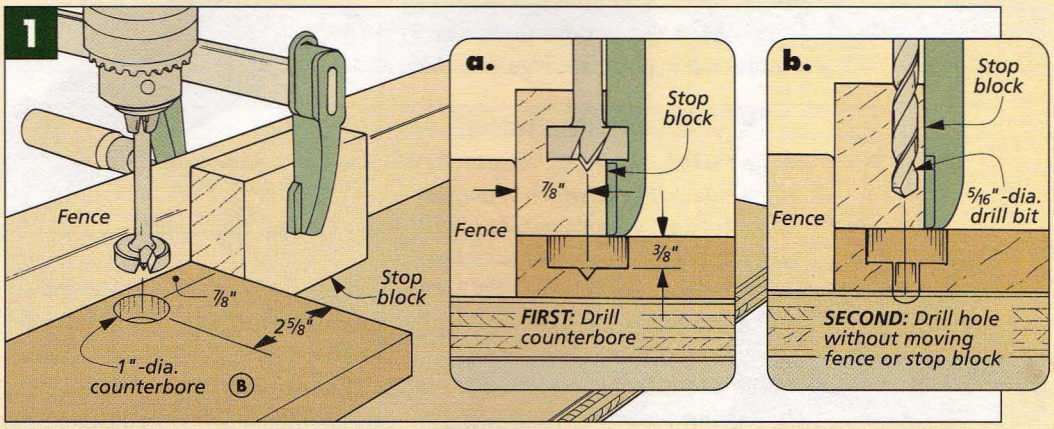

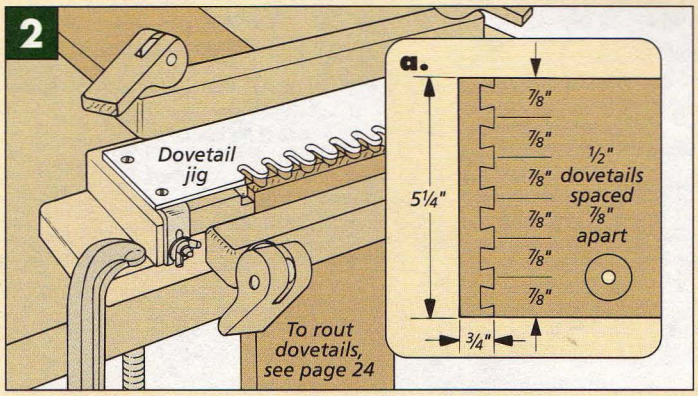

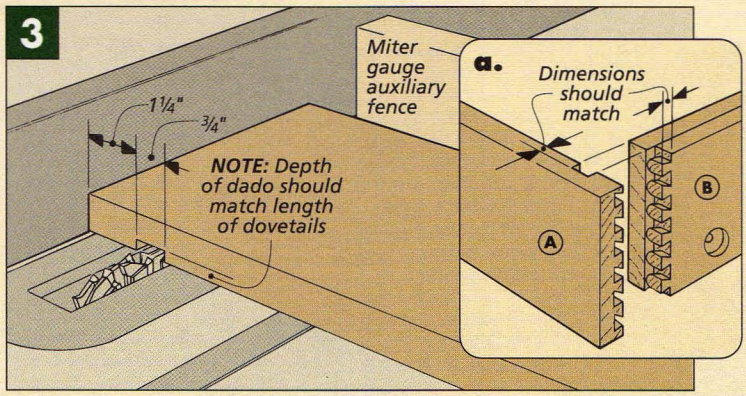

Box CONTINUED

Once you have the dadoes cut to size, you're ready to glue and assemble the box. I glued up the dovetailed pieces first. Then I slid the two interior end pieces into the dadoes and clamped the box together.

BOTTOM. The box is almost complete, but the 1/4"-thick plywood **bottom (C)** still needs to be added. Once the glue dries, start by routing a 3/8"-wide rabbet around the large opening in the bottom of the box, see Figs. 4 and 4a. The depth should match the thickness of the plywood bottom.

When you're routing across the front and back, you may need to clamp a support block flush with the pieces to support the router base, see Fig. 4. (The double-wall ends should provide enough support for the base while you're routing across the ends.)

The router leaves the corners of the rabbet rounded. So I squared them up with a chisel, see Fig. 4b. Then I cut the bottom to size and screwed it in place, see Figs. 5 and 5a.

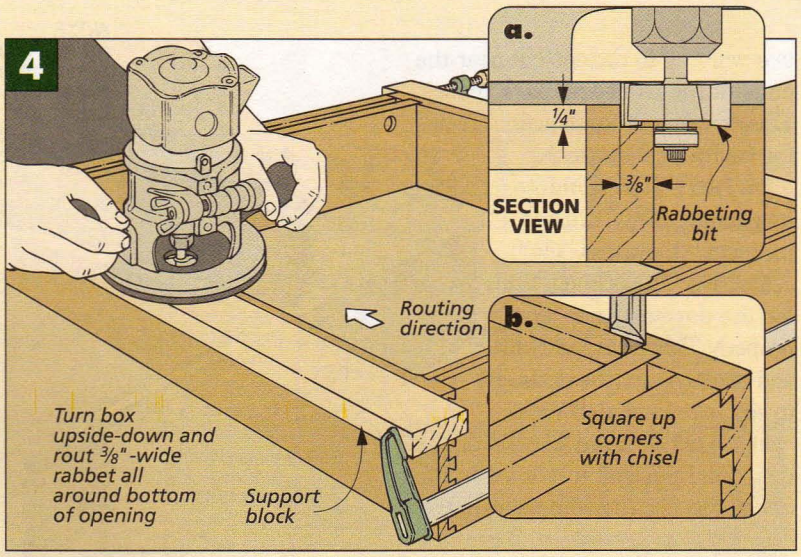

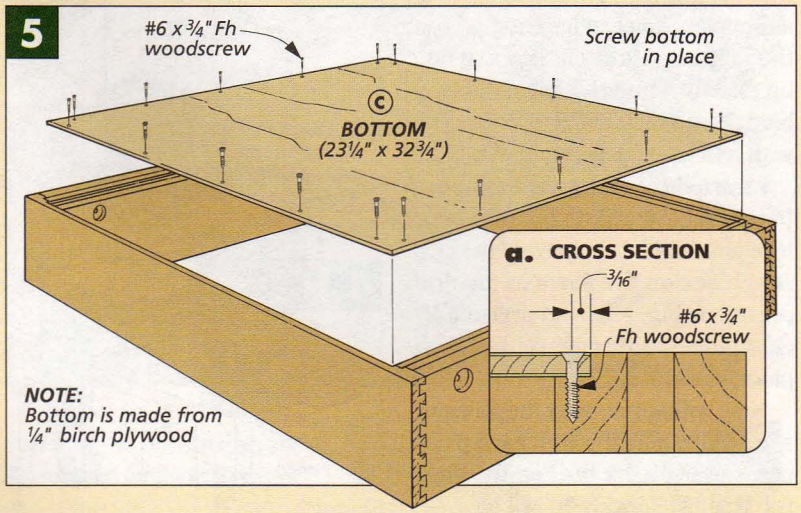

LID CONSTRUCTION

With the box completed, you can start working on the lid, which is nothing more than a plywood panel in a hardwood frame. It's designed to be flush with the box on the ends and back, but it overhangs the front 1 1/2". This provides room for a handle later.

CUT FRAME. To make the lid, I began by cutting the frame pieces to size, see the Lid Exploded View on the opposite page. The lid frame is made up of two **rails (D)** and two **stiles (E)**.

GROOVES AND TENONS. Once these pieces are all cut to size, you can cut a centered groove along one edge of each piece to hold the plywood panel, see detail 'b' in the Exploded View.

To center the groove on the thickness of the rails and stiles, cut the groove in two passes, flipping the workpiece between passes.

STUB TENONS. With the grooves cut in all four frame pieces, stub tenons on the ends of the stiles can be cut. These are sized to fit the grooves in the rails. You can make them on the table saw by burying a dado blade in a plywood fence that is clamped to the rip fence, see detail 'c' in the Lid Exploded View. Shop Note: I found it easier to "sneak up" on the thickness of the stub tenon by raising the blade a little at a time between passes.

After cutting the **lid panel (F)** from

MATERIALS, SUPPLIES, & CUTTING DIAGRAM

A Front/Back (2)	3/4 x 5 1/4 - 36	**F** Lid Panel (1) 1/4 ply. - 21 1/4 x 31 3/4	• (8) 5/16" Washers
B Ends (4)	3/4 x 5 1/4 - 23 1/8	**G** Handle (1) 3/4 x 1 1/4 - 36	• (4) 3"-Dia. Plastic Wheels
C Bottom (1)	1/4 ply. - 23 1/4 x 32 3/4	• (20) #6 x 3/4" Fh Woodscrews	• (1) 1 1/2" x 30" Piano Hinge w/Screws
D Lid Rails (2)	3/4 x 2 1/2 - 36	• (4) 5/16-18 x 2" Hex Bolts	
E Lid Stiles (2)	3/4 x 2 1/2 - 21 1/4	• (4) 5/16-18 Lock Nuts	

ALSO NEEDED: *One 4' x 4' sheet of 1/4" birch plywood*

3/4" x 5 1/2" - 96" Hard Maple (Two Boards @ 3.67 Bd. Ft. Each)

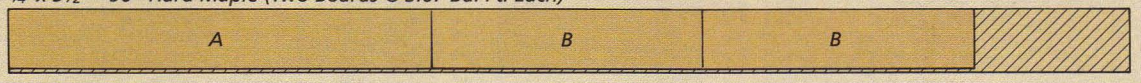

3/4" x 5 1/2" - 84" Hard Maple (3.2 Bd. Ft.)

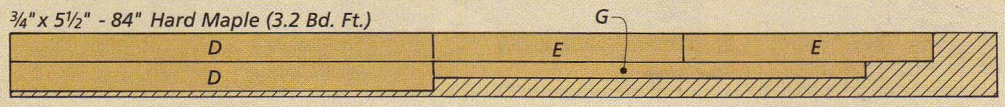

1/4" plywood, the lid can be glued up. Then the edges are eased by routing a 3/8" roundover on the top.

ADD HANDLE. There's one other piece to add before attaching the lid — a handle. The **handle (G)** is a strip of hardwood that runs along the front edge of the lid, see Exploded View.

To make the handle, I cut a piece of stock to match the length of the lid (36"). The finished handle has a roundover routed on the front and back edges, see detail 'a.' But I had to create this profile in two steps. First I rounded over just one edge of the handle (the inside edge). But before rounding over the front edge, I glued the handle to the lid. (It's easier to position the clamps while the front edge is still partially square.)

HINGE MORTISE. The lid is attached to the box with a piano hinge. This hinge is mortised into the back of the box and simply screwed to the surface of the lid, see Fig. 6a.

To create the mortise for the hinge, I used a router and a straight bit, see Fig. 6. To provide some support for the router base, I clamped a scrap piece to the back of the box, flush with the top. Then I "nibbled away" the waste, working from one end of the mortise to the other, see Fig. 6. A chisel can be used to square off the ends of the mortise, see Fig. 6b.

FINISH. Now is a good time to apply a finish to the box. (I used a wipe-on oil finish). After the finish dries, the lid can be attached. First screw the hinge into the mortise. Using some spacer blocks for support, position the lid so that it's flush with the top of the box, see Fig. 7. Then simply screw the hinge to the lid. Note: I used a Vix bit to center the pilot holes for my hinge screws.

ADD WHEELS. All that's left now is to add the wheels. Hex bolts serve as "axles," and washers and lock nuts hold everything together, see detail 'a' in the Exploded View on page 21. Shop Note: To make the axles for the wheels, I cut 2"-long bolts down to 1 5/8". I used 2" bolts (instead of shorter ones) so each wheel has a smooth, unthreaded portion to ride on. W

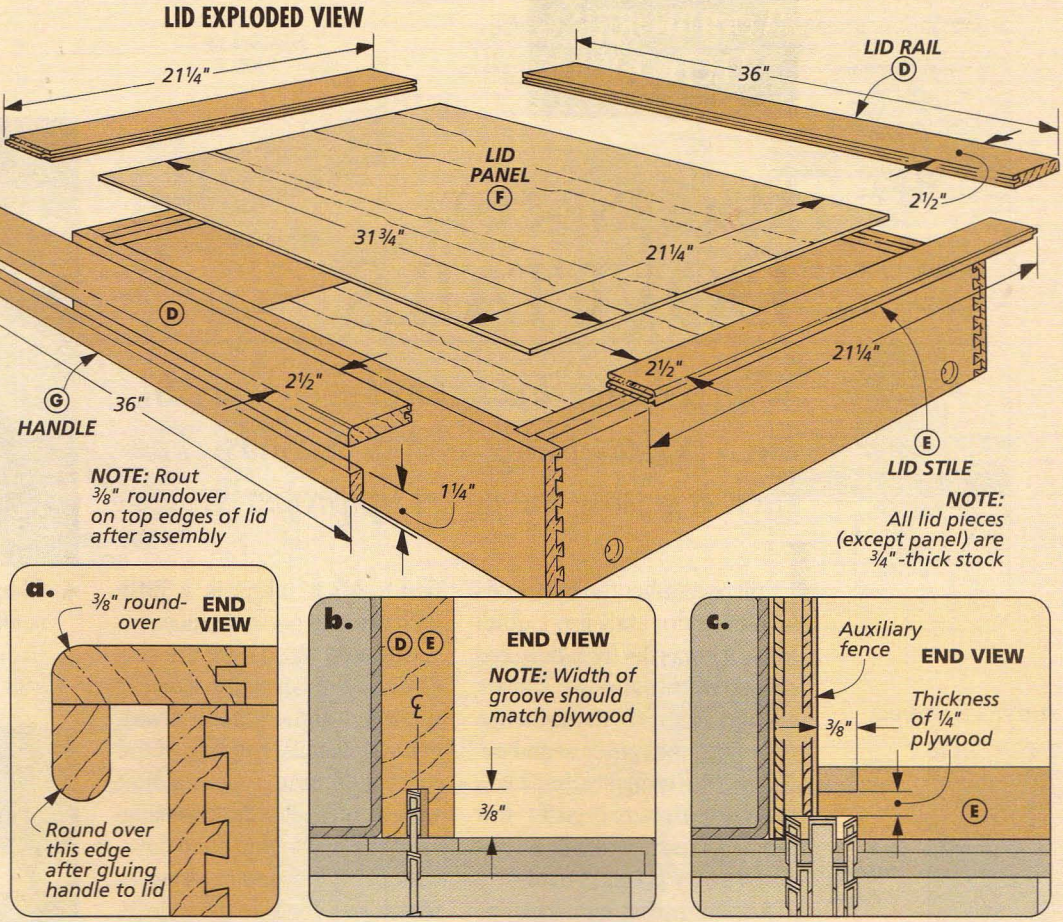

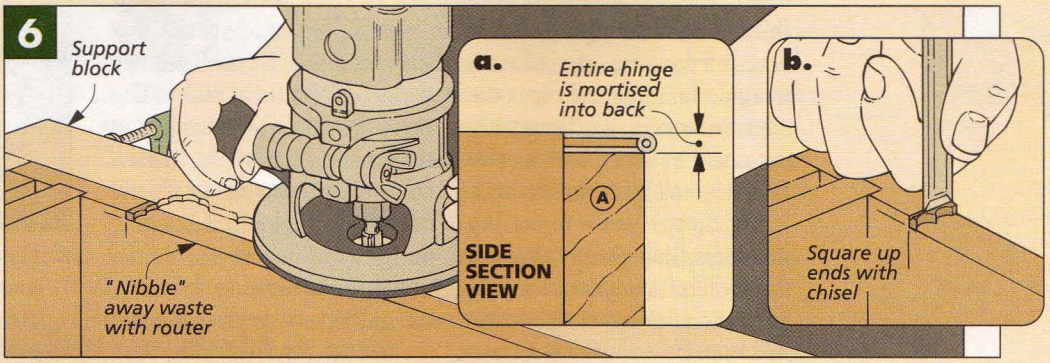

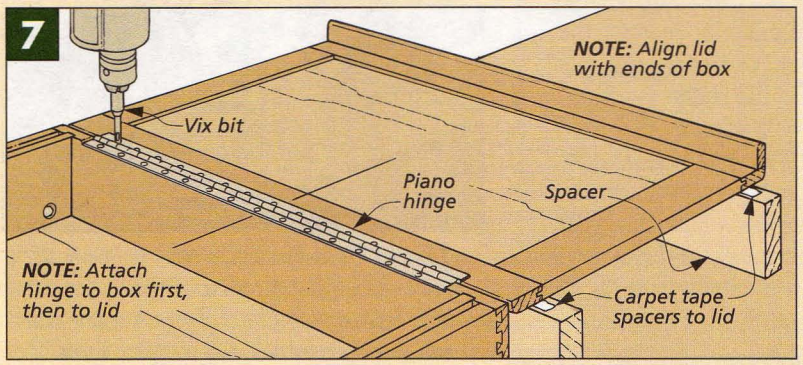

A handle allows you to grip the box when pulling it out from under the bed.

MACHINE-CUT DOVETAILS

With a router and a dovetail jig you can cut a perfect-fitting joint in seconds. The trick is getting the jig set up properly.

I still remember the first time I used a dovetail jig. I don't know if it was the high-powered scream of the router, the shower of chips, or the rhythmic motion of moving the router in and out around the template, but I was hooked. For the next few months, I used dovetails on just about every project I made.

Although that initial excitement has subsided a little, I still think a dovetail jig is a great accessory for any shop. I can't imagine building the chest-on-chest featured in this issue without one. For speed and accuracy, a dovetail jig is hard to beat.

But there's more to cutting dovetails than simply flipping the switch on your router. The jig and router requires a careful setup. Plus, you'll need a couple test pieces to "fine-tune" the fit. Fortunately, this isn't too difficult. All it takes is a little patience and perseverance.

HALF-BLIND JIGS. There are several kinds of dovetail jigs on the market designed to cut a variety of dovetails. But one of the more common types is that which cuts half-blind dovetails, see box below. (Half-blind dovetails are often used on drawers where you don't want the dovetails to be visible from the front.)

All half-blind dovetail jigs work in the same fashion, see series of photos at right. The two workpieces are clamped in the jig at a right angle. Then a comb-like template is placed over the workpieces. A bushing on the router base (or sometimes a bearing on the router bit) guides a dovetail-shaped bit around the "fingers" of the template, cutting both the pins and the tails at the same time.

▲ ***Clamp pieces in jig.*** *After positioning both workpieces underneath the jig template, tighten down the cams on the clamping bars to hold the workpieces securely in place.*

▲ ***Rout dovetails.*** *The template guides the router in and out as the dovetails and pins are routed simultaneously. This ensures a perfectly-aligned joint every time.*

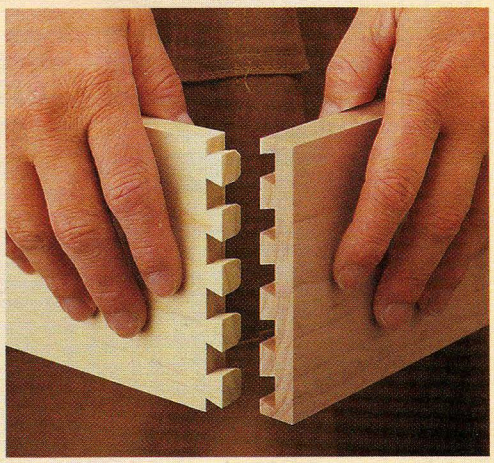

▲ ***Test fit.*** *With the pieces removed from the jig, test the fit of the joint. The tails should slide halfway into the sockets. A soft mallet can then be used to drive the joint home.*

HALF-BLIND DOVETAIL JIGS

While there are a number of half-blind dovetail jigs on the market, they all work in the same manner. The main differences lie in the type of clamping system (some use cams, others use wing nuts), the material used for the template (plastic or metal), and the ease of adjusting the stops.

A bare-bones jig can be purchased for as little as $60 while heavier-duty versions sell for $300 to $350.

Editor's Note: Although we used the *Woodsmith* dovetail jig for this article, the procedure is nearly identical for all half-blind dovetail jigs of this type.

The template controls the spacing of the dovetails. Most templates are designed to cut ½"-wide dovetails spaced ⅞" apart. So it's best to plan your projects so the width (height) of the drawers is always a multiple of ⅞". This way, you'll end up with a joint that is symmetrical — a perfect half-pin on both the top and the bottom, see drawing in margin.

TEST CUTS. The template may control the spacing of the dovetails, but there are still a couple of adjustments that you'll have to make to control the fit of the joint. And since you don't want to risk ruining your finished workpieces, you'll need to practice on a couple of test pieces that are the same width and thickness as your drawer pieces. Then once you get the settings just right, you can rout the dovetails on your actual workpieces.

SETTING UP THE JIG. Essentially, there are three different adjustments that you'll need to be concerned with when setting up the jig.

First, a "stepped" stop on each end of the jig is used to create an offset between the two workpieces and to position them from side-to-side underneath the template. (On some jigs, this offset is created by using two separate stops.) This stop ensures that the dovetails are centered on the width of the workpieces (leaving equal-sized half-pins at the top and bottom).

When you're making a drawer or box, half the joints are cut on the left side of the jig and half are cut on the right side. (This way, the bottom of the workpiece is always against a stop.) So you'll have to set the stop at each end independently, see Step 1.

The second adjustment to make is to the template. Two stop nuts on the threaded rods control the front-to-back positioning of the template, which affects the depth of the *sockets*. (The sockets are the spaces into which the dovetails fit.)

And finally, raising or lowering the height of the dovetail bit in the router controls the fit of the dovetails.

Later, you'll fine-tune each of these adjustments. But for now, you just want to get them "in the ballpark" so you can make your first test cut, see Steps 2 through 4.

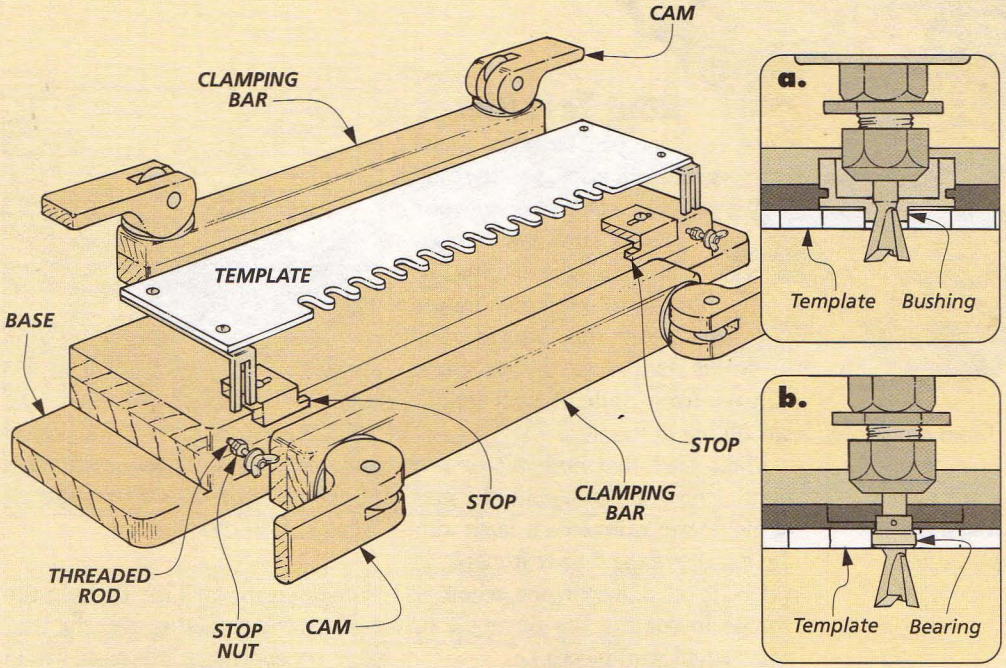

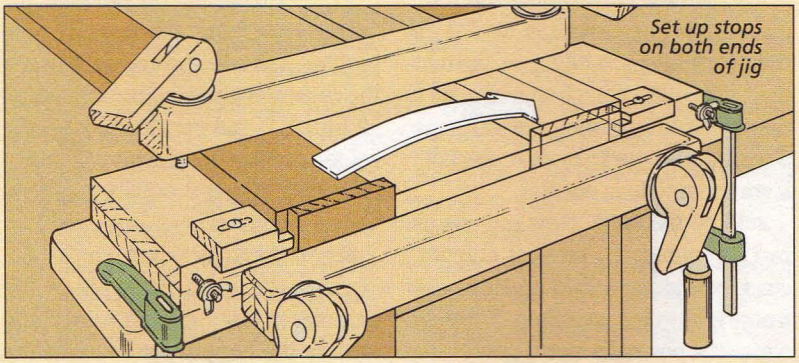

1 *The stops on the ends of the jig are used to create a 7/16" offset between the two workpieces and to position them from side-to-side beneath the template. You'll need to adjust each end of the jig independently, since half the joints are cut on the left and half on the right.*

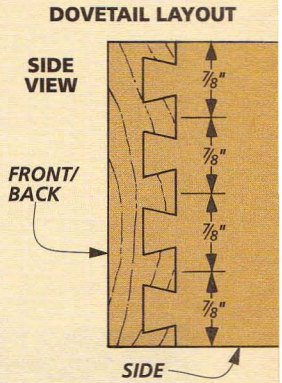

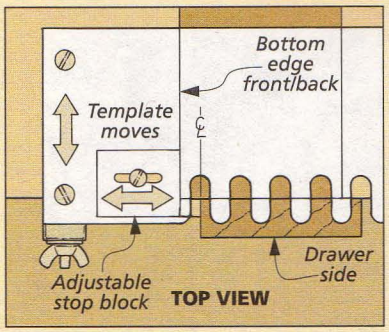

2 *With the test pieces in the jig, adjust the stop so the edge of the front test piece is centered in the first notch or opening of the template.*

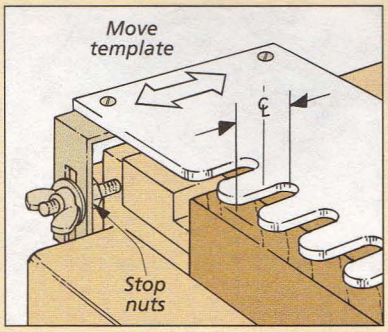

3 *Stop nuts should be adjusted in or out so fingers of template are centered over the "joint line" between the two test pieces.*

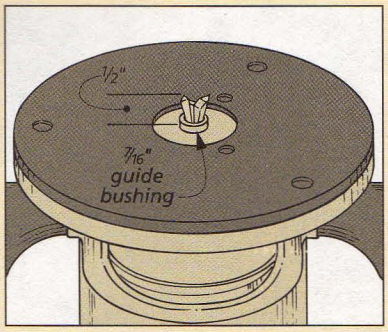

4 *Mount 7/16" guide bushing onto router. Then to start with, raise bit ½" from router base. It may have to be adjusted slightly later on.*

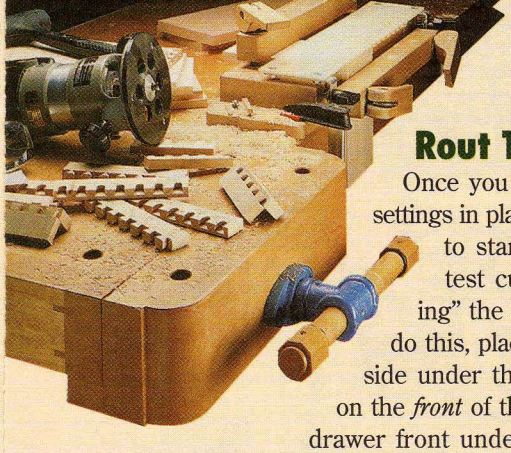

▲ *To get a perfect-fitting joint, you'll need to rout a few test pieces first.*

Rout Test Pieces

Once you have the initial settings in place, you're ready to start making your test cuts and "tweaking" the adjustments. To do this, place a test drawer side under the clamping bar on the *front* of the jig and a test drawer front under the clamping bar on *top* of the jig.

Make sure that both pieces are tight against the stops and the end of the drawer side piece is flush with the top face of the drawer front piece. (This is also important when it comes to routing the dovetails in your actual workpieces.)

ADD TEMPLATE. Next mount the template on the jig. Hold it down flat on the workpieces while you tighten the wing nuts. Check to make sure the template is resting flat and isn't flexed by the workpieces (especially if your template is plastic).

ROUT THE TEST PIECES. Now the pieces can be routed. To prevent chipout, start by making a *light* scoring pass from right to left, see Step. 5. Safety Note: It's normally not a good idea to rout in this direction (backrouting). But it's okay in this case since you are taking just a light pass.

After the initial scoring cut, start gently moving the router in and out of the fingers, beginning on the left-hand side of the jig, see Step 6. You should be able to feel the guide bushing stop at the back of each notch.

Let the bushing and the template guide the router. You want to keep the bushing in contact with the edge of the template, but you don't need to force it. Shop Tip: To help the router glide smoothly over the template, try applying a little paste wax to the router base and the template.

One other thing. When you're routing the dovetails, be careful to keep the router base flat on the template at all times. If you accidentally tip the router or lift it up, the bit will take a chunk out of your dovetails, your template, or both. (This is not good.)

REMOVE TEMPLATE. When you've finished routing the dovetails in the test pieces, turn off the router and remove the template to examine the dovetails. It's a good idea to leave the pieces in the jig until after you've checked to make sure that you've routed every pin and socket cleanly, see Step 7. This way, if you miss a spot you can simply place the template back on the workpieces and clean up the area you missed.

TEST FIT. Now you can remove the test pieces from the jig and see how they fit. Before fitting the pieces together, though, take a second to blow out any chips in the sockets and lightly sand off any wood fibers remaining on the pieces, see Step 8.

Slide the pieces together to see how they fit, see Step 9. Ideally, you should be able to slide the dovetails about halfway into the sockets by hand. Then a light tap or two with a mallet should fully seat the tails.

Don't worry if the fit isn't perfect on the first try. Chances are you'll have to make some adjustments to the jig or the router bit (or both), see box on opposite page.

The important thing is to avoid trying to adjust everything in one fell swoop. Instead, focus on one thing at a time and keep making test cuts until you get it right. Shop Note: You can re-use your test pieces by simply trimming the dovetails off the ends.

Once you're satisfied with the fit, try cutting a test joint on the right side of the jig as well to make sure the stop on this end is positioned correctly. (You shouldn't have to change the bit setting or the stop nuts for the template.) Now you're ready to rout the dovetails on your actual pieces.

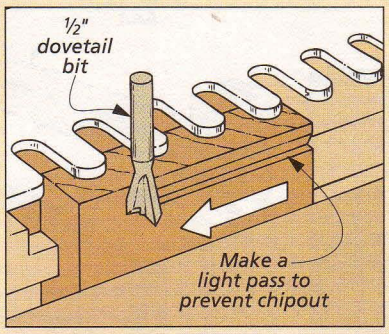

5 *To prevent chipout on the drawer side, start by making a light pass from right to left. This skim cut establishes a clean shoulder line.*

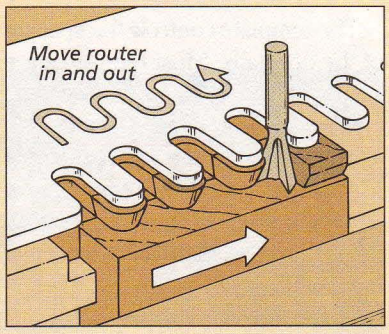

6 *Next, move the router from left to right in and out of the notches. Push the router into each notch until the bushing hits the back of the notch.*

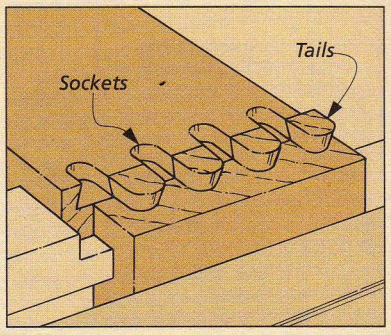

7 *Finally, remove the template (but not the workpieces) and check to make sure that all of the dovetails and sockets are uniform.*

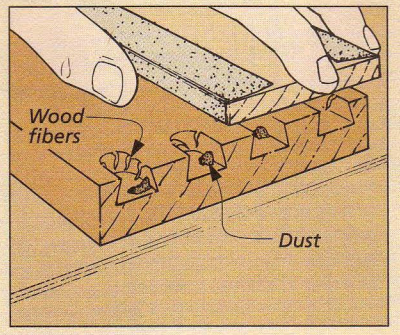

8 *Before testing the fit of the joint, blow out any remaining wood chips and sand off any "whiskers" that are still attached to the pieces.*

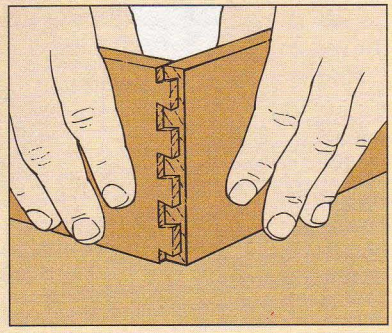

9 *The dovetails should easily fit into the sockets about half way. A couple of taps with a mallet should drive them in the rest of the way.*

Rout Drawer Pieces

The procedure for routing the dovetails on the final workpieces is the same one that you used for routing your test pieces. But this is where all your patience in adjusting the jig pays off. Now it's just a matter of clamping each piece in the jig and routing the dovetails. The only trick is keeping all the drawer pieces organized as you go along.

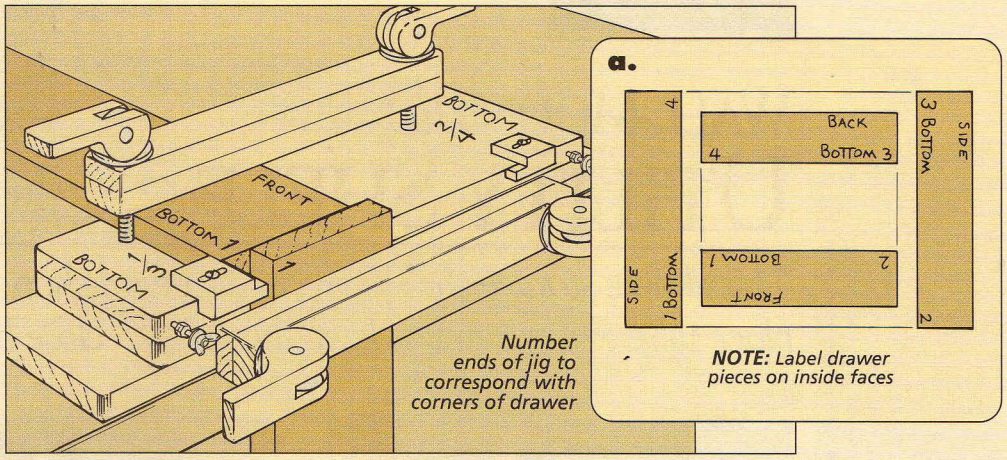

LAY OUT JOINTS. To help keep things straight, I like to start by laying out all four drawer pieces on top of my bench, with the *inside* faces up, see detail 'a.' Then I number the matching corners (starting at the left, front corner) and label each piece (front, back or side). Finally, label or mark the bottom edge of each piece.

When you've got all the pieces labeled, you're ready to start routing the first corner. There are two main things to remember when placing the pieces in the jig. First, the pieces are always inserted so the inside faces out. And second, the bottom edges should always be against the stops. This means that you have to cut half the joints on the left side of the jig and half on the right side. Shop Tip: To help myself keep straight which corner goes where, I also label the ends of the jig, see drawing above.

ROUT FIRST CORNER. To rout the first corner, place the drawer side in the front of the jig and the drawer front on the top of the jig, just like you did with the test pieces. Make sure the pieces are against the stops and the clamps are tightened securely. Then rout the dovetails.

At this point, you've routed the joint at the left front corner of the drawer (No. 1). Next, rout the right rear corner joint (No. 3) using the same procedure. (Place the drawer back piece on the top of the jig.)

The other two joints (Nos. 2 and 4) are routed with the pieces tight against the stop block on the *right* side of the jig.

When routing on the right side of the jig, follow the same procedure. Make a scoring pass from right to left and then move the router in and out of the notches from left to right.

Now it's just a matter of repeating this process to cut the dovetails on the remainder of the drawers. W

TESTING THE FIT

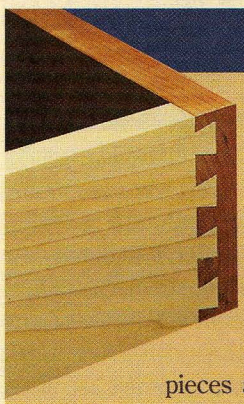

Setting up to rout machine-cut dovetails is always a trial and error effort. There's usually lots of fiddling around with test pieces and adjusting of the jig to get a perfect fit.

TOO LOOSE. If the joint is so loose that the pieces wiggle around when they're put together, the depth of cut is too shallow, see first photo. Increase the depth of cut about 1/32" and try again.

TOO TIGHT. If a trial cut is so tight that the pieces can't be tapped together, the router bit is extended out too far from the router base. Decrease the depth of cut about 1/32" and try again.

TOO DEEP. If the pins on the drawer sides go too far into the sockets on the drawer front, the sockets are too deep, see middle photo below. To correct this, move the template forward (toward you) by turning the stop nuts on the studs counterclockwise. (Be sure to adjust the nuts on both ends of the jig.)

TOO SHALLOW. If the pins don't go far enough into the sockets, move the template back (away from you) by turning the stop nuts clockwise.

OFFSET. If the top edges of the two pieces aren't flush when you assemble the joint, the problem is either with the offset of the stop blocks (it should be 7/16") or the fact that the pieces weren't tight against the stops, see third photo.

OTHER PROBLEMS. Most other problems are usually caused by the pieces not being clamped down in the jig so they are flush across the top, or because they move out of position as they're being routed.

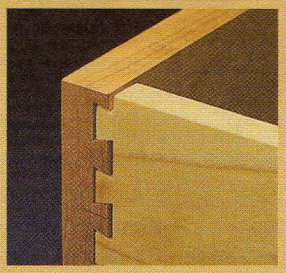

Too Loose. If joint is too loose, increase bit depth. Too Tight. If the joint is too tight, decrease depth.

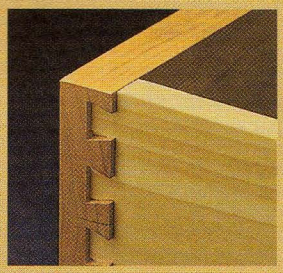

Too Deep. If pins go deep, move template forward. Too Shallow. If not deep enough, move back.

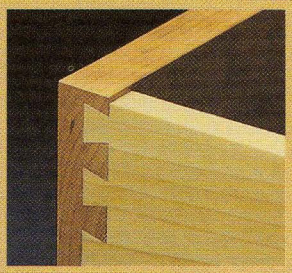

Offset. If the pieces don't align at top or bottom, they may not have been tight against stops.

WALL-MOUNTED UTILITY SHELF

This simple storage shelf is great for a workshop, a garage, or any other place where you want to keep things close by — yet out of the way.

After a particularly long day a few weeks ago, I decided to spend a couple of hours relaxing in my shop. When I got to my workbench, however, I discovered that it was littered with tools and supplies — a not-so-pleasant reminder of my last project. So instead of woodworking, I spent the next hour clearing off my bench.

As I was cleaning up, I realized that what I needed was a place to put things *while* I'm working on a project. Some place where things will be out of the way — but still within easy reach. That's where the idea for this utility wall shelf came from.

It's not designed to hold every tool you own. But it's just the right size to keep all the tools and hardware items you use most often off your bench and up out of the way. And since it can be mounted on the wall over a workbench, everything is still close at hand. In fact, the open shelving design makes it easy to grab whatever you need, whenever you need it.

BIG DIFFERENCE. What's really nice about this shelf is that it doesn't take much time or material to build, yet it makes a big difference in the appearance and organization of your shop. But a shop isn't the only place it can be used.

After I built this shelf, I got to thinking that it would be handy in the garage or a laundry room. Any place where you need to add some accessible storage, but don't want to spend a whole lot of time or money.

LIGHT. There's only one problem with a wall shelf that's mounted over a work area. It tends to block the light and create shadows. So to overcome this, I added a low-profile fluorescent light fixture to the bottom of the shelf, see photo below.

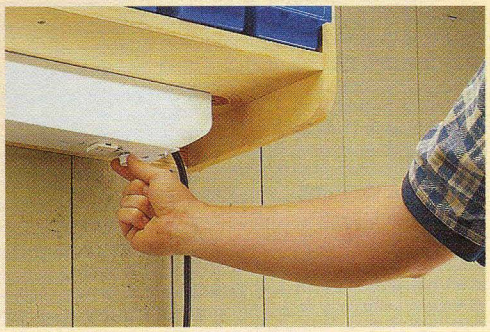

▲ *A fluorescent light fixture mounted underneath the shelf will eliminate shadows and light up your work area.*

Case

This storage shelf is really made up of three shelves sandwiched between two sides. The bottom shelf is divided into four separate compartments for holding plastic storage bins or optional drawers. The middle shelf is split into two main sections, with a space in between for storing sandpaper.

MATERIAL. A word about the materials used to build this shelf. I used 1x12 pine boards for my shelf. (These are commonly available at most home centers or lumberyards.)

If you go this route, just make sure to select boards that are all the same thickness, or else plane them lightly before you start building. This way all the dadoes that will join the pieces can be cut the same width.

Another alternative is to build the shelf out of plywood. Baltic Birch plywood would be a good choice since it's stable and doesn't have a lot of voids along the edges.

CUT PIECES TO SIZE. To build the shelf, start by cutting the main pieces to size — the two **sides (A)** and the three **shelves (B)**. The dimensions are shown in the Case Exploded View.

Shop Note: Since the shelves are fairly long, you might want to attach a long auxiliary fence to your miter gauge to help support the shelves as you're trimming them to length.

RABBETS. After the pieces are cut to size, you can set the shelves aside. There's still a little work to do on the sides. First, a rabbet is cut along the back edge of each side to hold a back that's added later, see Fig. 1. To do this, simply bury a dado blade in an auxiliary fence that's attached to your rip fence, see Fig. 1a.

ROUNDED CORNERS. Next, the front corners of each side are rounded off, see detail 'a' in the Exploded View. You can cut away the waste with a sabre saw or band saw. Then just sand the edges smooth by hand or with a disk or belt sander.

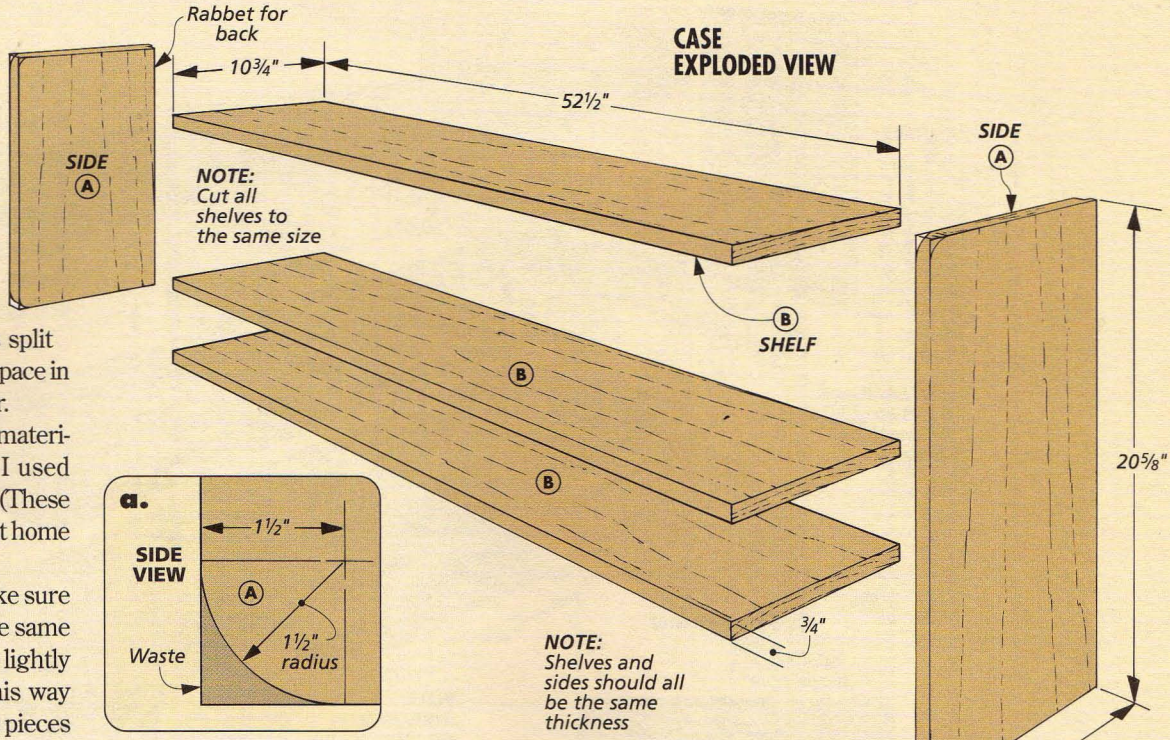

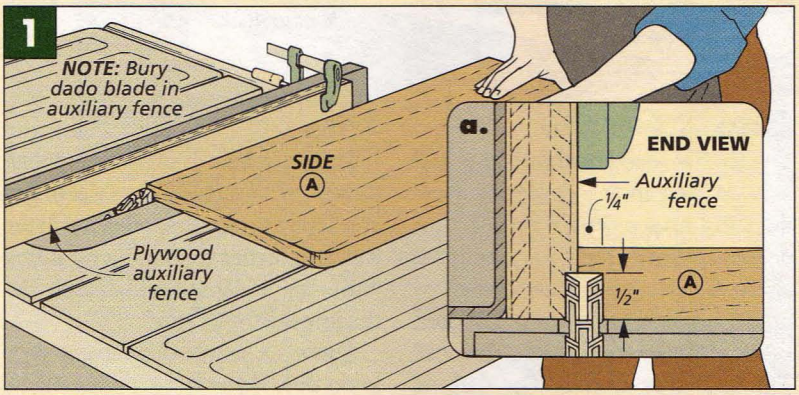

MATERIALS & SUPPLIES

A	Sides (2)	¾ x 11 - 20⅝
B	Shelves (3)	¾ x 10¾ - 52½
C	Large Dividers (2)	¾ x 10¾ - 10½
D	Small Dividers (3)	¾ x 10¾ - 4⅜
E	Upper & Lower Rails (2)	¾ x 2⅜ - 53¼
F	Back (1)	¼ hdbd. - 15⅞ x 53¼
G	Sandpaper Shelves (5)	¼ hdbd. - 9¾ x 10¾
H	Drawer Fronts/Backs* (8)	¾ x 4 1/16 - 12 7/16
I	Drawer Sides* (8)	¾ x 4 1/16 - 10¼
J	Drawer Bottoms* (4)	¼ hdbd. - 9¾ x 11 7/16

*optional

- (12) #8 x 2" Fh Woodscrews
- (28) #8x1½" Fh Woodscrews
- (59) 3d Finish Nails
- (4) 1"-dia. Knobs*

CUTTING DIAGRAM

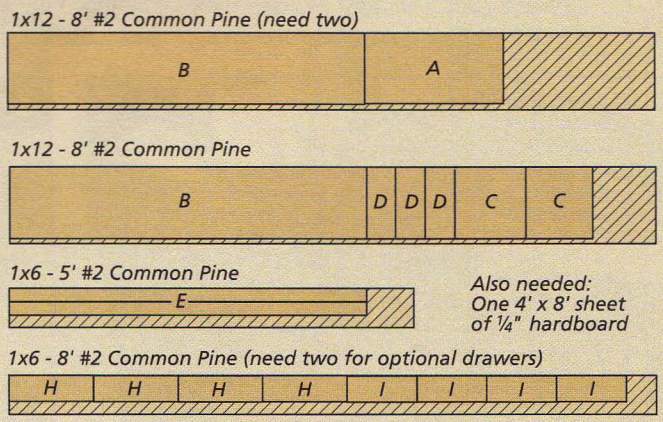

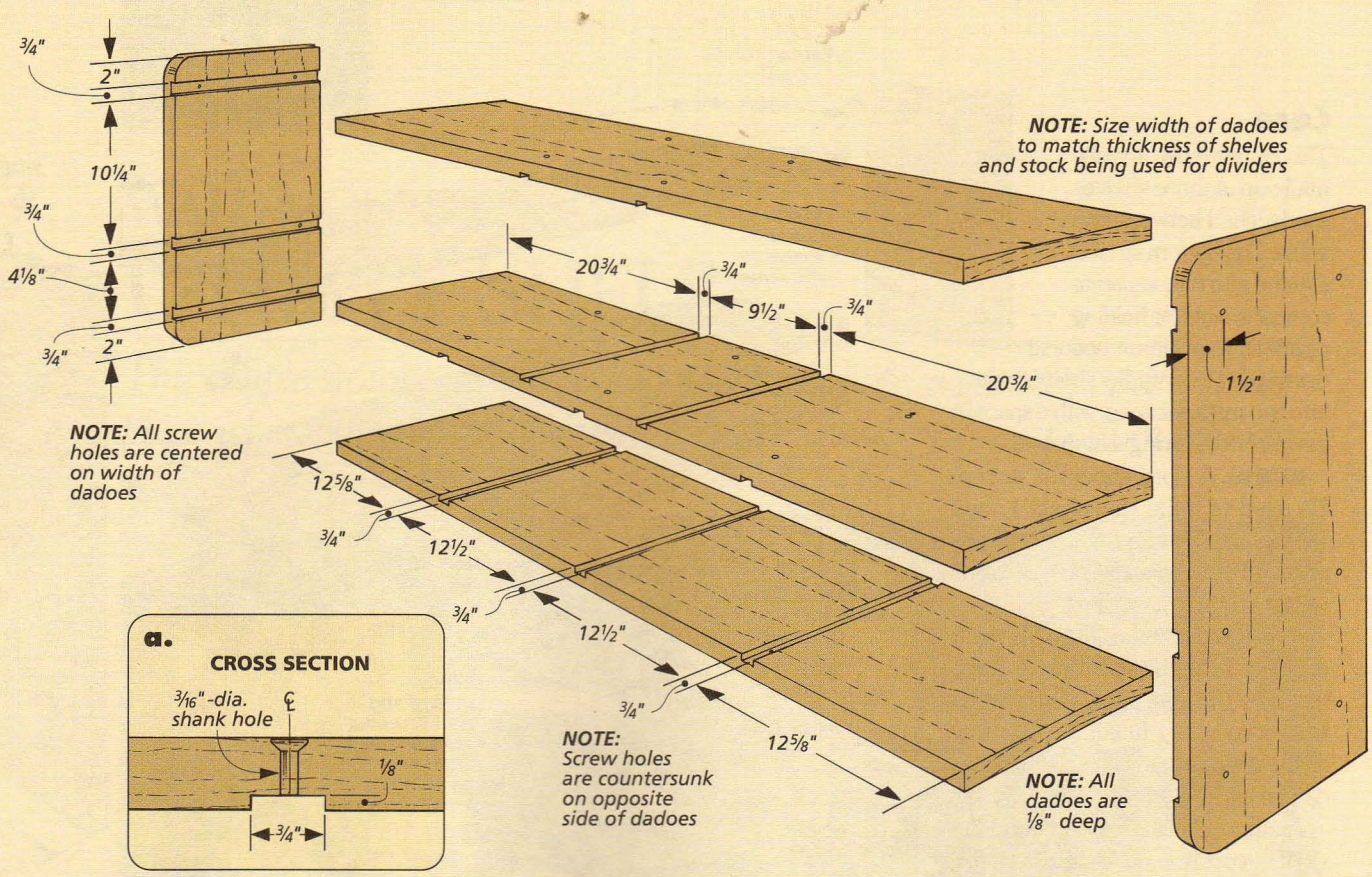

▲ *Using a pair of guide fences, you can rout perfect dadoes every time, see page 33 for more information.*

Case CONTINUED

The shelf is assembled with glue and screws. But in the exploded view drawing above, you'll notice that dadoes are cut on the sides to hold the shelves, and also on the shelves to hold the dividers that are added later.

So why use screws *and* dadoes? The reason is simple. The dadoes help align the pieces during assembly. But dado joints and glue alone aren't strong enough to hold the shelf together. The screws provide the extra strength that's needed.

DADOES. Because all the dadoes in this project are the same size, it makes sense to cut them all at the same time, even though you haven't made the dividers yet. This way, you only have to set up your dado blade one time.

Since the dadoes are for alignment, they don't have to be very deep. But you'll want to pay close attention to the width. In order to get a good fitting joint, the width should match the thickness of your stock.

There's a couple of different ways to do this. If you have a dado blade, you can "fine-tune" the dado width by using shims (with a stack dado set) or by "dialing" in the width (on a wobble-type dado). Or you can rout the dadoes with a straight bit and a simple jig. (For more on this technique, please refer to the article on page 33.)

If you're using a table saw, you can use the rip fence to position the dadoes. For the side pieces, this is just a matter of setting the rip fence and pushing the workpiece over the dado blade, see Fig. 2.

But for the shelves, I did things a little bit different. Because the shelves are fairly long, I added a long auxiliary fence to my miter gauge to support the workpieces, see Fig. 3. Safety Note: It's okay to use the miter gauge and rip fence together in this situation since you're not cutting all the way through the workpiece.

SCREW HOLES. Normally, I drill the pilot holes and add screws after assembly. But because the interior spaces of the compartments are too small to get a drill into, I decided to predrill all the countersunk screw holes on the drill press before assembling the shelf, see drawing above and detail 'a.'

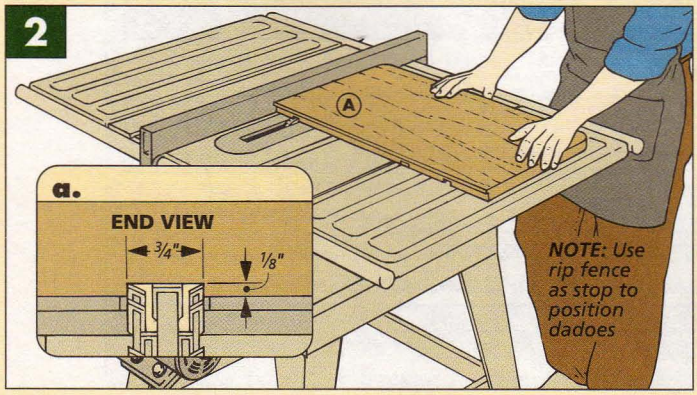

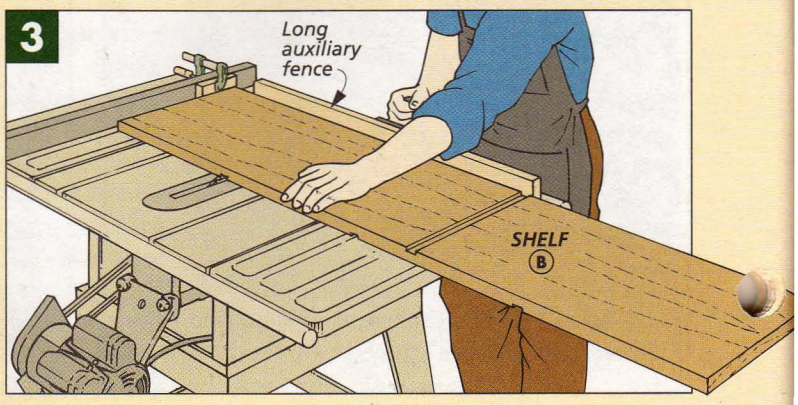

Dividers & Back

Once you've finished drilling all those holes, you can move on to making the dividers. There are two sizes of dividers in the shelf. A pair of **large dividers (C)** separates the top and middle shelves. And three **small dividers (D)** separate the middle and bottom shelves.

The small dividers are simply cut to size, see Divider Exploded View. But the large dividers contain a series of 1/4"-wide dadoes to hold some hardboard shelves that are added after the shelf is assembled.

When the dividers are finished, you're ready to begin assembly. In order to get at all the screw holes easily, it's important to follow a certain order when assembling the shelf.

First, you apply glue in the dadoes of the upper and middle shelves and sandwich the large dividers in between. After screwing these pieces together, you can add the small dividers and the lower shelf. Then, sandwich the entire assembly between the two sides, again using glue and screws, see Fig. 4.

CLEATS & BACK. At this point, the shelf is almost finished. All that remains is to add a back and a couple of rails to strengthen the shelf and provide a means for hanging it. I made the **upper & lower rails (E)** first. These are just two narrow strips of wood that have a tongue cut on each end to fit in the rabbets in the end pieces, see Figs. 5a and 5b. Then a rabbet is cut along one edge of each rail to allow them to fit over the top and bottom shelves, see Figs. 5a and 5c. Finally, the rails are glued and screwed in place, see Fig. 5.

To make the back of the shelf, simply measure the opening between the rails and the sides and cut a piece of 1/4" hardboard to fit. This **back (F)** is simply nailed in place with some small (3d) finish nails. Shop Note: I drilled small pilot holes in the hardboard to make the nailing easier.

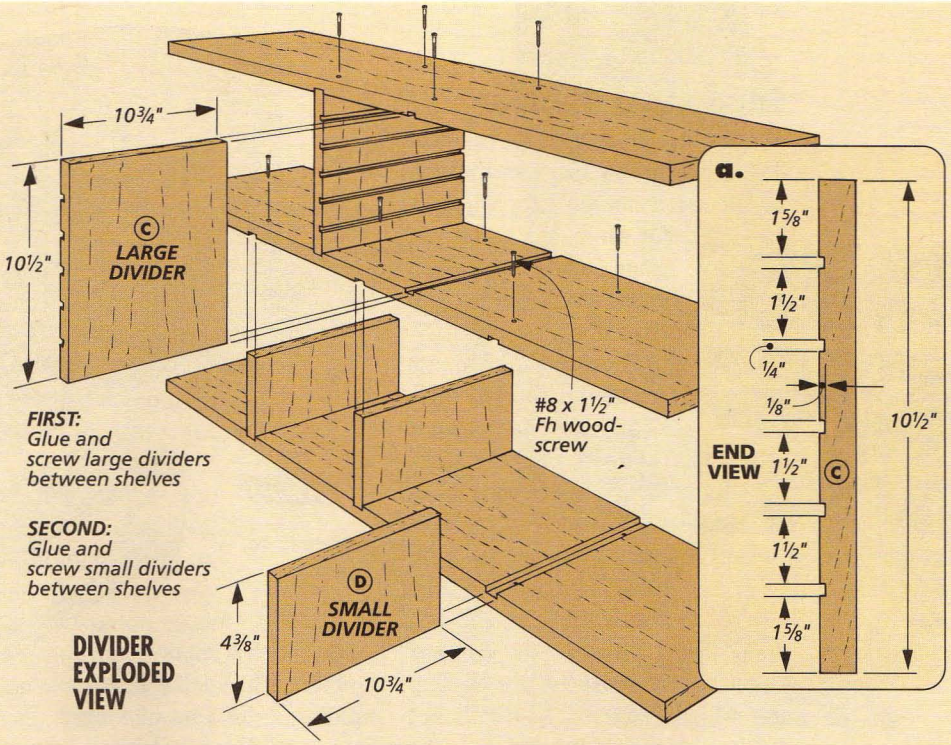

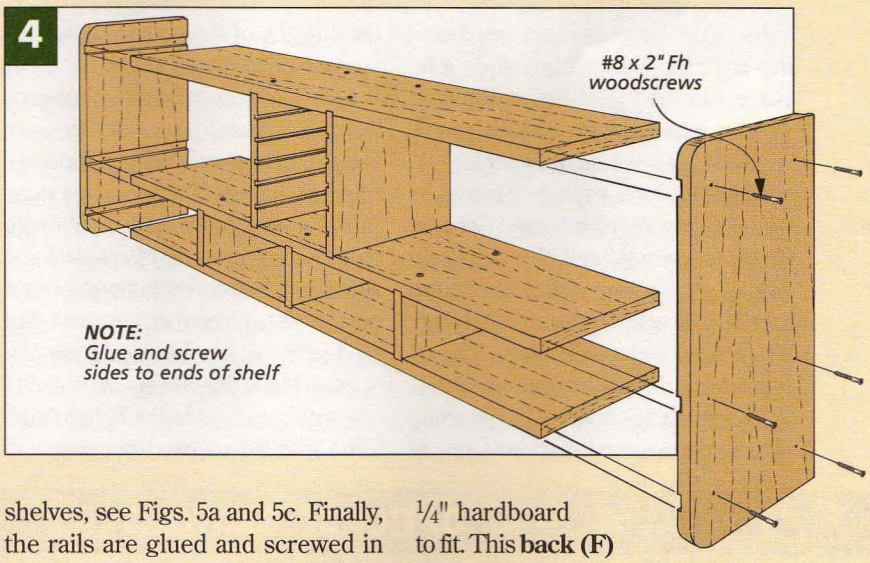

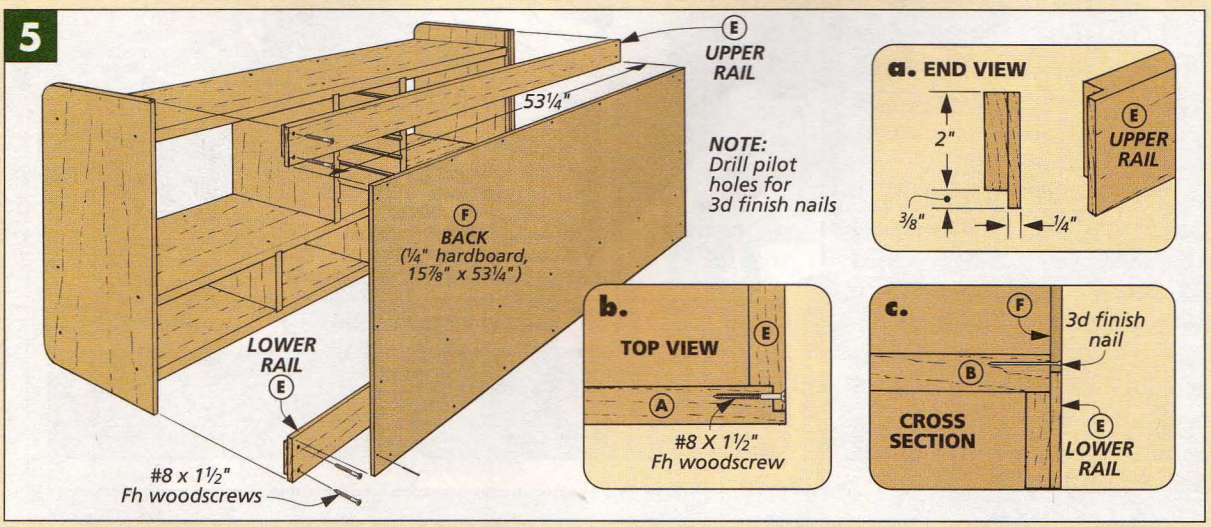

Sandpaper Shelves

There's only one more thing to add to the shelf before hanging it on the wall. To create flat storage compartments for sandpaper or project plans, I added some small shelves between the two large dividers (C).

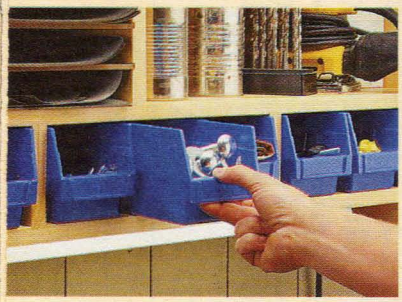

▲ *The lower compartments of the shelf are sized to hold plastic hardware storage bins.*

These compartments are kind of like the mail-sorting bins that you used to find in old hotel lobbies. The only difference is that the slots are horizontal rather than vertical. And instead of letters, they hold sandpaper.

These **sandpaper shelves (G)** are nothing more than pieces of 1/4" hardboard that are cut to fit in the dadoes in the sides of the large dividers, see drawing at right. They simply slide into place. (I didn't glue the sandpaper shelves into the dadoes just in case I wanted to take them out later.)

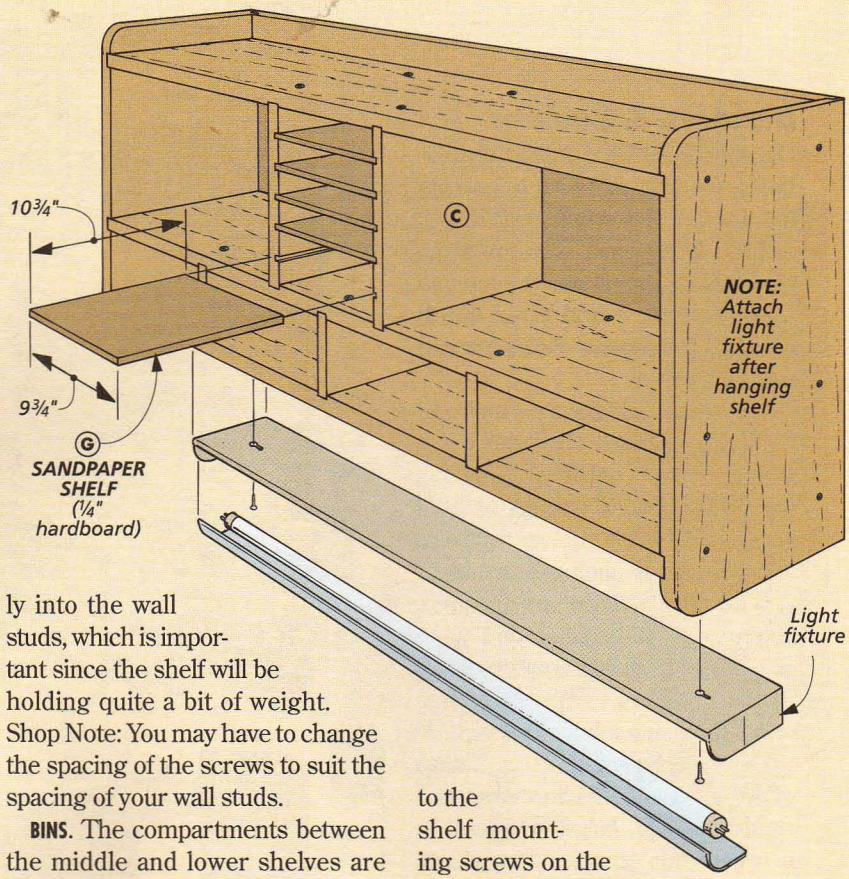

MOUNTING. After wiping on a couple of coats of an oil finish (I used General Finishes' Arm-R-Seal) the shelf can be mounted on the wall. The shelf is screwed directly to the wall through the upper and lower rails. Three screws are driven through each rail, each spaced 16" apart. This spacing allows you to drive the screws directly into the wall studs, which is important since the shelf will be holding quite a bit of weight. Shop Note: You may have to change the spacing of the screws to suit the spacing of your wall studs.

BINS. The compartments between the middle and lower shelves are sized to hold plastic storage bins, see photo in margin. These bins are commonly available through mail order sources and are great for hardware. But if you prefer, you can make drawers for the compartments instead. See the box below for more details on this.

LIGHT. Once the shelf is mounted to the wall, you can add the light fixture. (The light fixture blocks your access to the shelf mounting screws on the lower rail, so it has to be added after the shelf is mounted.) I chose a 48", low-profile fluorescent fixture, see drawing.

The nice thing about this fixture is that it has a switch on one end. So once it's wired and screwed to the bottom of the shelf, all you have to do is plug it in, then flip the switch to turn it on and off. W

OPTIONAL DRAWERS

Bins are handy for storing hardware and other items, but because they're open, they collect a lot of dust. Replacing the bins with shop-made drawers solves this problem.

The drawer construction is straightforward. The drawers are sized to fit the openings of the shelf, see drawing. Solid, 3/4"-thick stock is used for the front, back, and sides of each drawer.

The ends of the drawer front and back are rabbeted to hold the sides, see detail 'a.' A groove near the bottom of each piece holds a 1/4"-thick hardboard bottom, see detail 'b.' Glue and nails fasten the sides to the front and back. Finally, a wood knob is added to the front of each drawer.

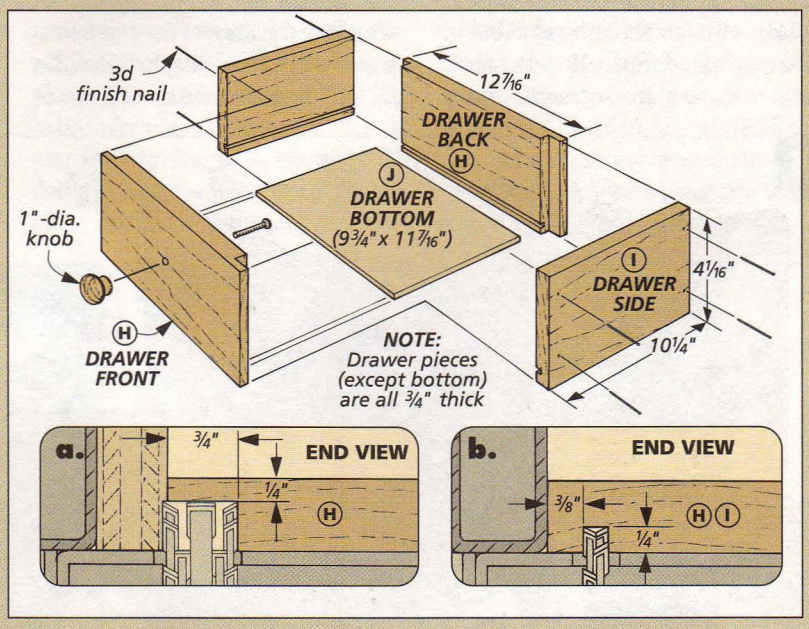

ROUTING DADOES

A table saw and a dado blade is usually my first choice when it comes to making dadoes. But sometimes a workpiece is too large or awkward to handle on the table saw. In that case, it's best to clamp it to a bench and rout the dadoes using a hand-held router and straight bit.

The secret is to use a pair of simple guides to produce straight, accurate cuts, see photo. And a spacer block ensures a "custom fit" joint.

GUIDES. Each guide consists of two parts: a hardboard base that acts as a routing platform and a wood fence to guide the router, see Fig. 1.

Shop Note: If you plan on using these guides for other projects, you might want to make them long enough to rout across the width of a full sheet of plywood (48" long). Also, it's best to start with an extra-wide base (6" in my case).

After gluing on the fence, the next step is to trim the base to final width. The idea here is to use the same router bit you plan to use when cutting the dadoes. (I used a ½" straight bit.) This creates two reference edges that establish the sides of the dado. One thing to be aware of is the bit may not be perfectly centered in the base of the router. So be sure that the same side of the base is against the fence when trimming the base pieces to width. Shop Tip: Make a mark on the router base and keep it in contact with the fence at all times.

SETUP. Once the guides are complete, positioning them on the workpiece only takes a minute. Start by laying out the location of one side of the dado. Then align the reference edge of one of the guides along that mark and clamp the guide in place, see Fig. 2.

▲ *With a router and a couple of shop-made guide fences, you can make perfect-fitting custom dadoes every time.*

SPACER. To position the second guide, there's no need to lay out the other side of the dado. The spacer takes care of that. (This is just a scrap that matches the thickness of the piece that will fit in the dado.) Set the spacer against the guide that's clamped to the workpiece. Then butt the second guide against the spacer. Now clamp this guide to the workpiece and remove the spacer.

ROUT DADO. At this point, you're ready to rout the dado. This is accomplished by making a series of shallow, overlapping passes. (Since the dadoes for the shop shelf are only ⅛" deep, you can set the router bit to cut the full depth of the dado in one pass.)

To define one side of the dado (and remove part of the waste material), turn on the router and run it along the fence of the first guide in the direction shown in Fig. 3. Note: Don't forget to orient the mark on the router base toward the fence.

After routing all the way across the workpiece, turn the router so the mark is oriented toward the fence on the second guide and then repeat the process. This produces a tight-fitting dado joint every time. W

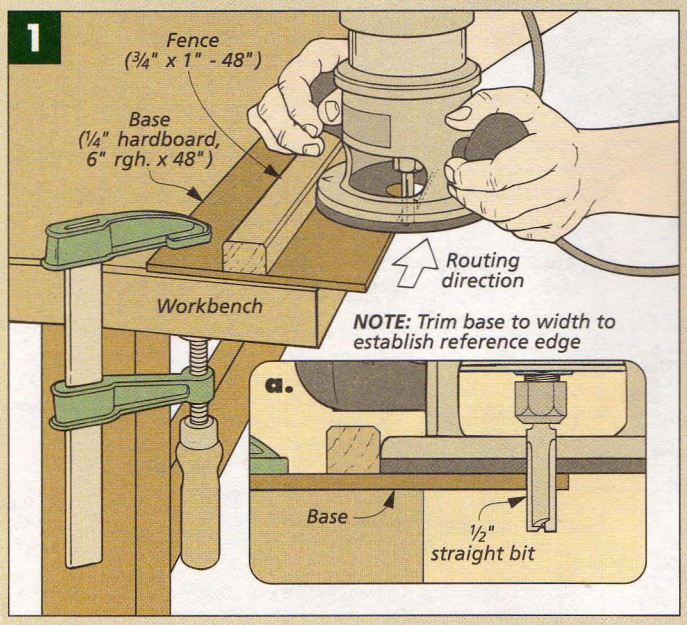

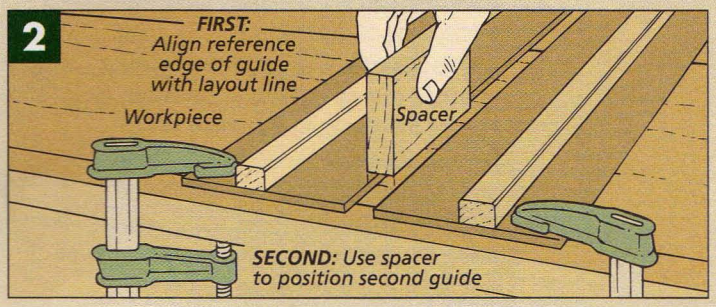

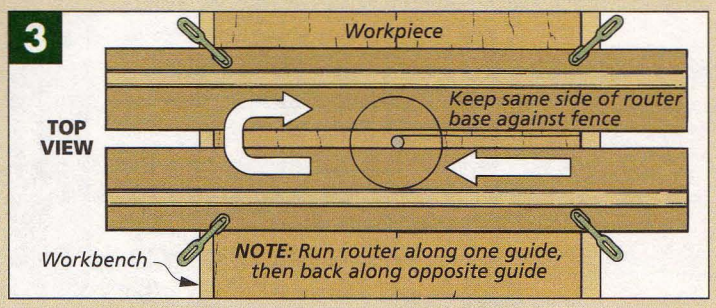

TABLE SAW EXTENSION WING

Adding an extension wing to the side of a table saw is a great way to increase the surface area of the table for working with wide boards or panels. But an idea sent in by **Bill Palmer**, of Downers Grove, Illinois, goes one step further. Bill's jig is a table saw extension wing that doubles as a storage compartment for blades and other accessories, see margin photo.

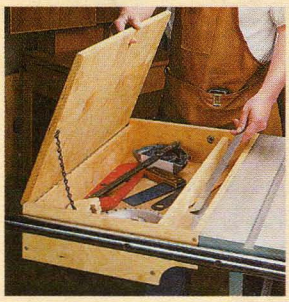

▲ *A chain fastened to the inside of the box prevents the lid from falling back when you open it.*

Essentially, the extension wing is nothing more than a plywood box with a hinged lid. With the lid closed, the box provides a wider table surface for ripping or crosscutting. But lifting the lid up reveals a sizeable storage area that is easily accessible.

The inside of the extension wing is divided into two separate compartments — a large, main compartment and a narrow, shallow compartment on the edge nearest the saw, see photo in margin.

This split-level construction allows you to build the main compartment deeper for holding larger items, while at the same time leaving enough clearance under the shallow compartment to be able to reach the blade tilt wheel on the side of the saw.

CONSTRUCTION. The extension wing is made out of 3/4"-thick plywood, except for the bottom which is 1/4" hardboard. Start by cutting the two ends to size and then lay out and cut the curve on the lower corner of each piece for the handwheel clearance, see Exploded View and detail 'b.'

Next, you can cut the dividers to size. There are two large dividers for the main compartment and a narrower divider that encloses the shallow compartment, see drawing.

Note: You may need to alter the length of the dividers to suit your saw.

The large dividers and end pieces are grooved to hold a couple of 1/4" hardboard bottoms. Then after drilling some countersunk holes for the mounting hardware, all the pieces can be screwed together.

LID. The lid of the wing is just a piece of 3/4" plywood that is attached to the box with a piano hinge. A chain fastened to the underside of the lid and the inside of the box prevents the lid from falling back when it's opened. And a finger hole drilled near the edge of the lid makes it easier to open.

The extension wing is simply bolted to the rails and side of the table saw, see detail 'a.' Just check to make sure when installing the wing that it's flush with the top of the saw. W

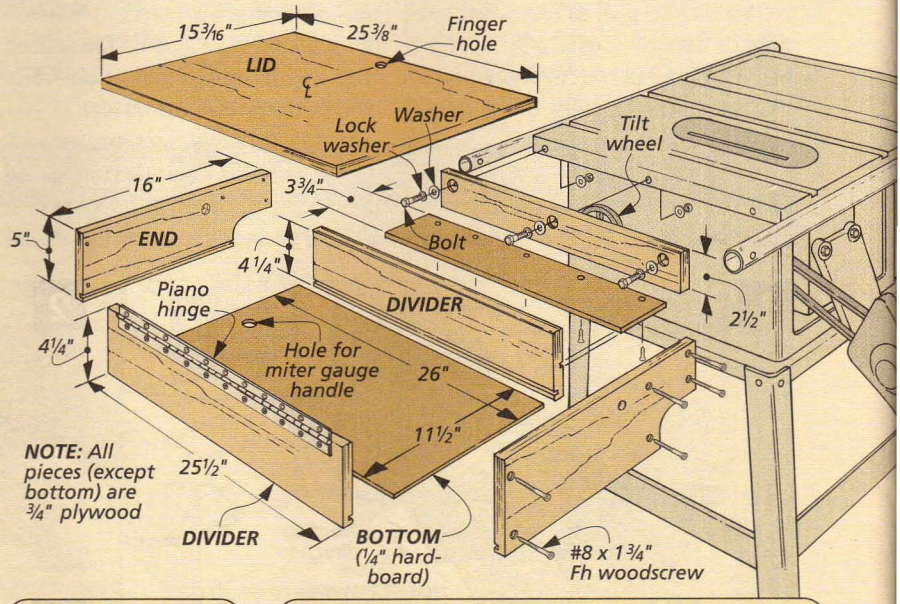

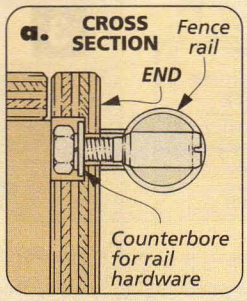

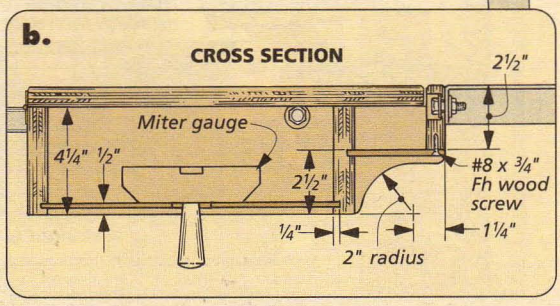

SOURCES

Woodsmith Project Supplies is currently offering hardware kits for one of the projects in this issue. Similar supplies, as well as supplies for the other projects featured, are also available at local woodworking stores or the mail order sources at right.

UNDER-BED STORAGE

Other than a handful of screws, the only hardware pieces you may have to order to build the under-bed storage box are a 30"-long piano hinge and 3/8"-thick plastic wheels. Both of these pieces are readily available through several of the mail order sources at right.

Note: Piano hinges come in standard lengths (up to 72"). I bought a 36"-long hinge and cut it down to 30" with a hacksaw.

READER'S JIG

Like the under-bed storage, you'll want to get a piano hinge to build the reader's jig on page 34. A short length of chain also is needed, and both of these pieces should be easy to find locally or through several of the sources at right.

CHEST-ON-CHEST

The most visible hardware for the cherry chest-on-chest on page 6 are the 3" brass bail pulls with porcelain rosettes. But there are also a number of other items needed as well: nylon glide tape, plastic turn buttons, threaded inserts, and of course, woodscrews.

A complete hardware kit for the chest-on-chest is available through *Woodsmith Project Supplies*.

• Chest-on-Chest Kit
7125-100 ..... $79.95

Note: Although the chest can be built in two separate sections, the kit is *only* available with supplies to build the entire chest.

If you wish to buy the hardware separately, the items are available from the sources listed at right. However, I should note that Lee Valley has all of the hardware except for the plastic turn buttons, and Van Dyke's Restorers has all the items except the nylon guide strips.

▲ *The chest-on-chest is just one piece in a cherry bedroom set we've built over the years. For more on building the other pieces, see "Bedroom Set" below.*

BEDROOM SET

The cherry chest-on-chest in this issue is the latest piece in a cherry bedroom set that we've been building for awhile now. The set also includes the lingerie dresser (*Issue No. 53*), four-drawer dresser (*No. 58*), night stand (*No. 76*), and classic cherry bed (*No. 108*), see photo above.

If you're interested in the other pieces in the set, *Woodsmith Project Supplies* is currently offering a special price on the four issues with the plans for the other furniture. (Also, I should mention that issue No. 58 has plans for the dovetail jig we used to build the drawers in this issue.)

• Bedroom Set Back Issues
703-040 ..... $13.95

Note: Hardware kits for all the bedroom projects in the set are still available through *Woodsmith Project Supplies*. W

MAIL ORDER SOURCES

Similar project supplies and hardware may be ordered from the following companies:

Lee Valley
800-871-8158
Chest-on-chest hardware, Reader's jig hardware

Rockler Woodworking
800-279-4441
Chest-on-chest hardware, Under-bed storage hardware

Van Dyke's Restorers
800-558-1234
Chest-on-chest hardware, Reader's jig hardware

Woodcraft
800-225-1153
Under-bed storage hardware

Woodworker's Supply
800-645-9292
Reader's jig hardware, Under-bed storage hardware

WOODSMITH PROJECT SUPPLIES

To order hardware kits from *Woodsmith Project Supplies*, please use our Toll Free order line, see below. It's open Monday through Friday, from 8 AM to 5 PM Central Time. Before calling, please have your VISA, MasterCard, or Discover Card ready.

If you would like to mail in your order, call the number below for more information concerning shipping charges as well as any applicable sales tax.

1-800-444-7527
When ordering, please use Key W125

Note: Prices subject to change after December 1999.

Woodsmith *on the web*

- Over 100 Woodworking Tips Online
- Project Plans You Can Download
- Catalog of Project Kits, Tools, Jigs & Plans
- Forums for Woodworking, Tools & Classifieds
- Links to Other Woodworking Sites
- *Woodsmith/ShopNotes* Back Issue Index
- Visit our other August Home Publishing Sites

www.woodsmith.com

New Online Customer Service
Click on Subscriber Services at
www.woodsmith.com
- Access your account status
- Find out if your payment has been received
- Change your mailing or e-mail address
- Tell us if you've missed an issue

Final Details

Chest-on-Chest. ► *This tall project is simply two shorter chests stacked on each other like large blocks. Both feature the same woodworking techniques with frame and panel construction and raised panel drawers. Step-by-step instructions begin on page 6.*

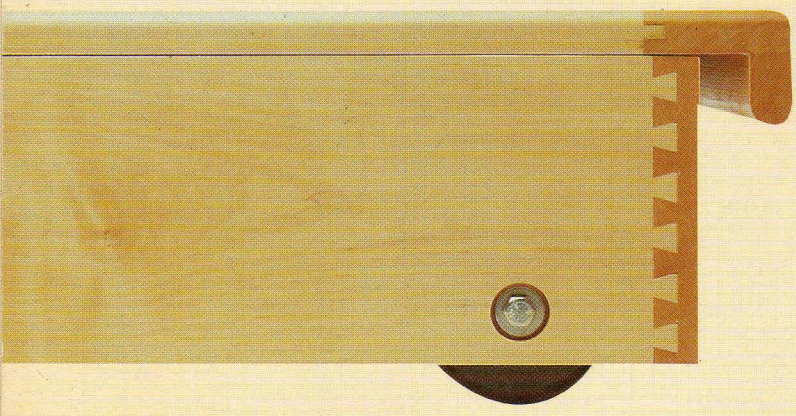

▲ **Under-Bed Storage.** *Like a drawer on wheels, this quick project will put the space beneath your bed to good use. Detailed plans begin on page 20.*

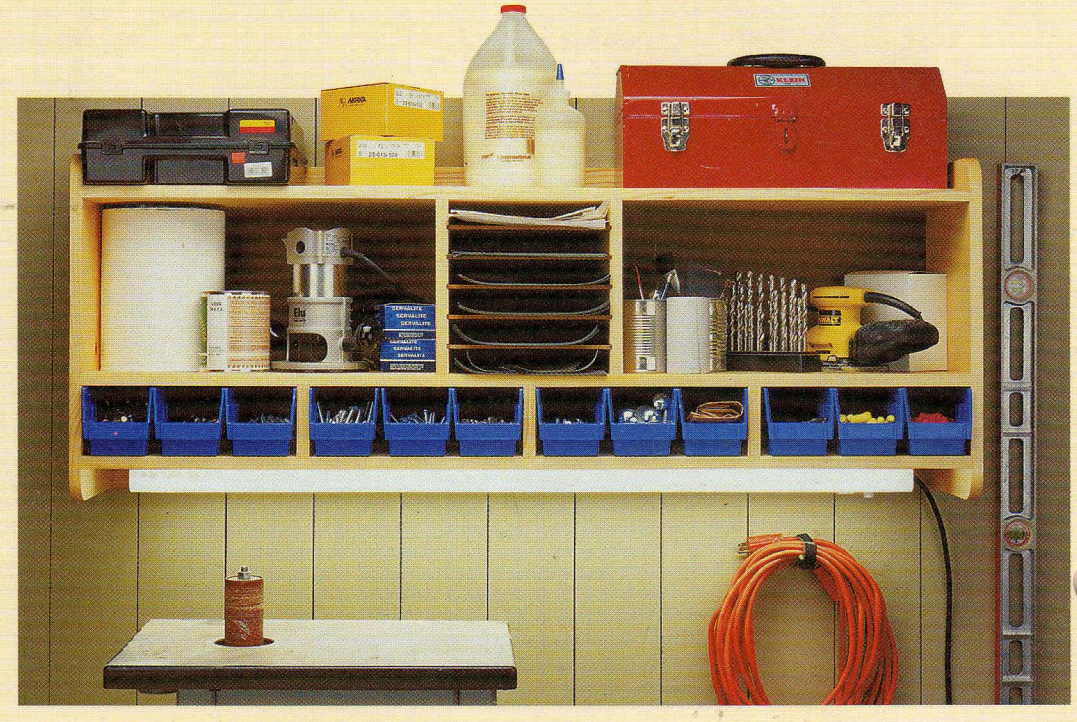

Wall-Mounted Shelf. ► *This shelf takes less than a full day to build, and its open "cubbies" and extra lighting will make working at your bench more convenient and enjoyable. Turn to page 28 for easy-to-follow directions.*